egeplast

Cable Protection Systems

Protection-layer pipe systems and accessories for high-performance and intelligent telecommunication infrastructures

We provide safety.
Experience. Quality. Product variability.

egeplast is an owner-managed family business which has been established as a developer and manufacturer of innovative plastic pipe systems for decades. Its system solutions are being applied in all segments related to pipeline infrastructure in more than 40 countries.

The egeplast product range offers high-performance individually configurable microduct systems tailored to the needs of any given installation situation which can be used flexibly for broadband and FTTX expansion. In addition to a high-quality product portfolio, egeplast customers benefit from our competent and solutions-oriented consulting services.

Efficient manufacturing technologies and in-house logistics as well as production in Germany enable us to support our customers' rapid expansion of their networks by providing a high level of delivery reliability thanks to short transport routes.

Sustainability and resource conservation have always been at the heart of our operations: In addition to the durability they offer, our pipe systems are optimally suitable for trenchless installation methods.

QUALITÄT QUALITY DIN EN ISO 9001:2015

UMWELT ENVIRONMENT DIN EN ISO 14001:2015

ENERGIE ENERGY DIN EN ISO 50001:2018

> 60 years
of experience in pipe extrusion

50.000
tons of plastics per year in Greven

customer support from concept to delivery

60
patents

3
production sites in Europe

high production
flexibility

ongoing
quality-testing
during and after manufacturing

Microducts made in
Germany

Perfect one-stop service for your construction project

1 Planning service

Our customers are able to benefit from customised solutions helping them to safely implement their plans and construction projects. They can rely on a wealth of experience and technical expertise when approaching us for advice. Our staff will be happy to provide personal assistance to you.

2 egeplast Training Center

At the training facilities provided by our headquarters in Greven, you can participate in product trainings and also learn new handling techniques. Feel free to approach our staff for more information.

3 On-site instructions

Do you have any questions about handling and installing our egeplast products? Please feel free to contact us. If you wish, we will provide personal assistance right at the construction site.

+49 2575 9710-0
www.egeplast.de/en/service-contact

Content

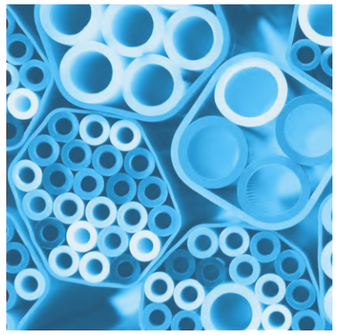

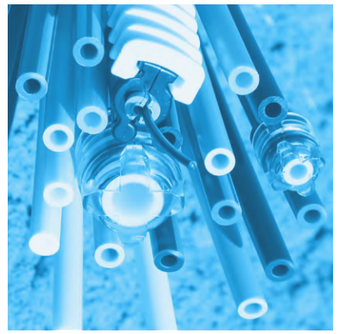

Products

Broadband networks: Network structures, application purposes 8
Microduct Multi protec 10
Microduct Multi 12
Microduct Mono 16
Special versions 20
Intelligent colour concept 21
Macroduct Mono 22
Macroduct Multi-S 23
Macroduct Multi-L 23

System Fittings

Connector, Reducer, Endstop 26
Gas blocker 28
Separable connector (EBM) 30
Separable sleeve – divisible (EZA-t) 31
Multi fit sealing – divisible (MfA-t) 32
Protection sleeves 34
Tools 35
Flexible bend 36
Click-fix 37
Delivery form 38

Installation

Instructions for the installation, transportation and storage of pipes and drums 43
Installation guidelines 43
Drum brake 44
Transportation 46
Storage 47
Temperatures, bending radii and tensile load 48
Cutting, connecting and removing 50
Installation methods 53
Open-trench installation 53
Pipe trench installation 54
Horizontal Drilling method 56
Ploughing method 57
Trenching 58
Moling (impact mole) 59
Blow-in into an empty conduit 60
Insertion into empty conduits 63
Final inspection 63
Calibration 63
Setting up a house connection 64

Information and instructions 67

egeplast

1 Products

Broadband networks: Network structures, application purposes 8
Microduct Multi protec 10
Microduct Multi 12
Microduct Mono 16
Special versions 20
Intelligent colour concept 21
Macroduct Mono 22
Macroduct Multi 23

Broadband networks: Network structures, application purposes

The digital era relies on a well-functioning infrastructure which ensures that technological developments such as Smart Home, Industry 4.0 or autonomous driving can be realised anywhere. In this context, a comprehensive fibre optic network is a must. egeplast offers all-in systems consisting of microducts to protect fibre optic cables as well as the matching accessories which are tailored exactly to the needs of any given application. These all-in systems can be used for pre-existing empty conduit routes as well as to install new underground networks.

In the area of fibre optic network installation, requirements can vary significantly. To cover the large range of applications related to this technology, different kinds of network structures are subsumed under the umbrella term „Fibre to the x" (FTTX). A distinction is made be-tween FTTC, FTTB and FTTH.

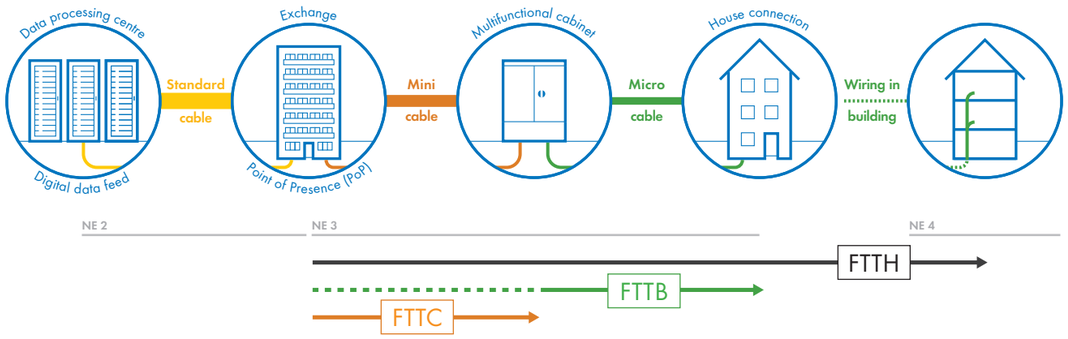

FTTH (**F**ibre **T**o **T**he **H**ome) denotes installation of the fibre optic cables up to the apartment. This kind of network structure guarantees the widest bandwidth possible.

FTTB (**F**ibre **T**o **T**he **B**uilding) implies that the fibre optic cable is installed up to the building. For this kind of network structure, the installation of the fibre optic cable ends e. g. in the basement of the building. From there, the signal is transmitted to the end customers via copper and coaxial cables.

If FTTC (**F**ibre **T**o **T**he **C**urb) is implemented, the fibre optic cable ends in a service area interface or multifunctional cabinet at the roadside or curb respectively. From here, the last leg of the transmission, to the end consumer, continues via a copper cable. This kind of network structure is obsolete: it no longer represents the state of the art and is no longer expanded today.

Possible Microduct associations for fast fibre roll-out:

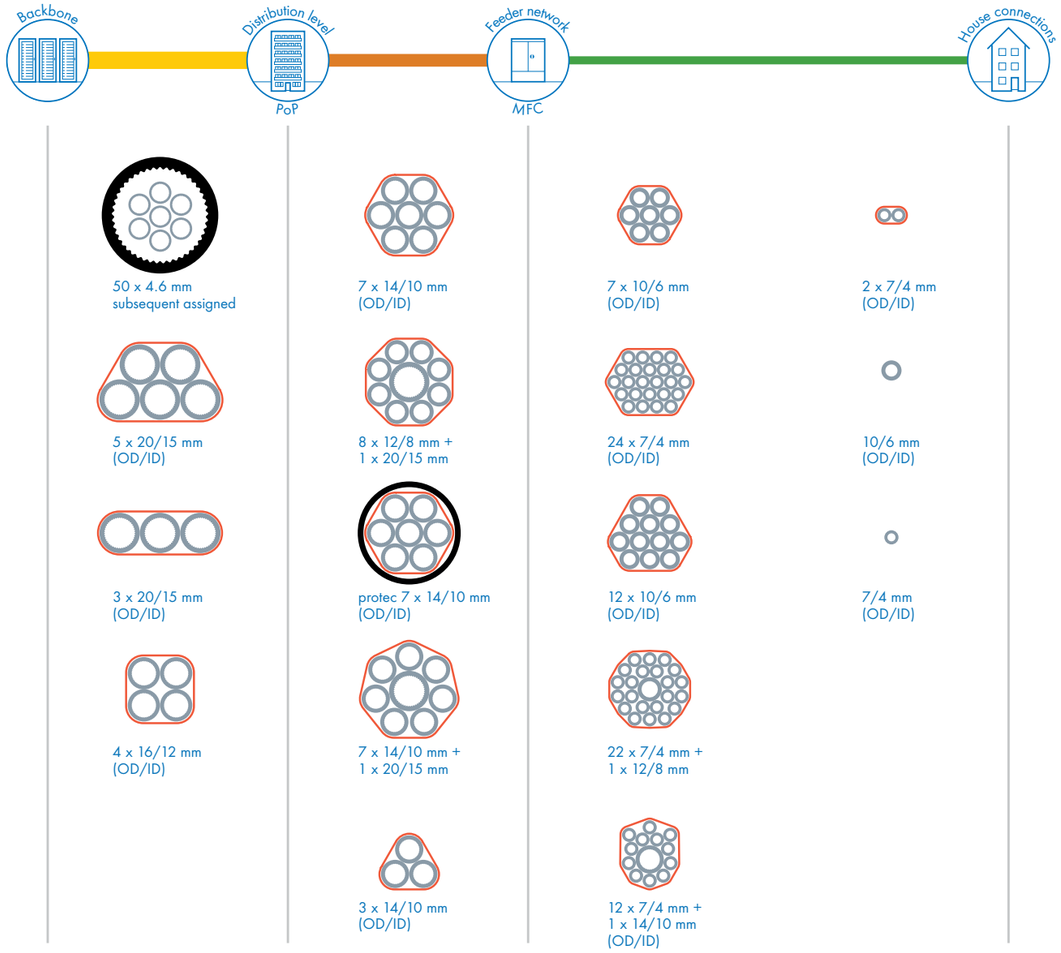

Customer specific solutions*

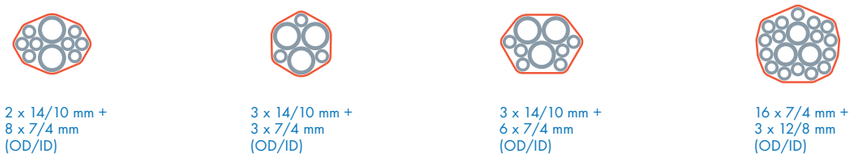

* This list gives only an examplary part of the possible product dimension and does not represent the complete portfolio.

egeplast

Microduct Multi protec

FTTC FTTB

System for sandbed-free and trenchless installation

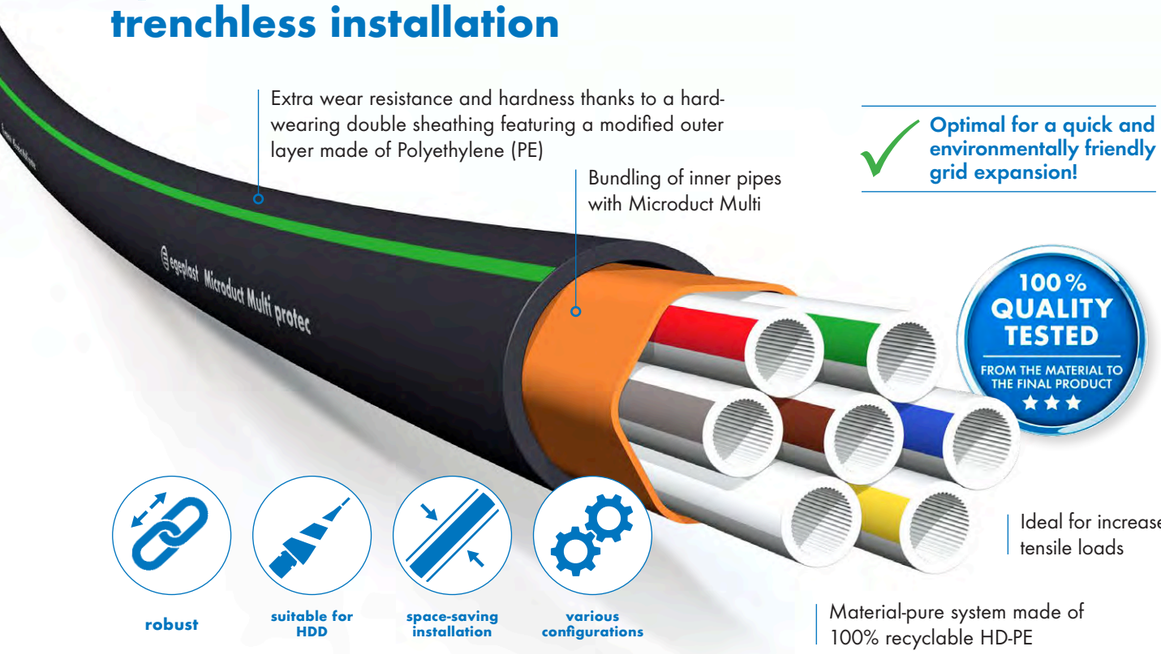

The pipe bundle which consists of several Microduct Mono pipes (cf. Mono pipes p. 16) features a flexible double sheathing with a modified outer layer which ensures added wear resistance and hardness, thus reliably preventing any damages to the inner pipes. Since the system has been designed to withstand increased tensile loads, this option is particularly suitable for flush-drilling installation.

Product benefits

- ✓ optimal protection of the inner Microducts from scoring and notching by means of a double sheathing
- ✓ robust and durable owing to extra wear resistance
- ✓ distribution of point loads by means of a round protective sheathing
- ✓ cost-efficient, since there is no need to insert a protective pipe and no need for subsequent assignment
- ✓ the layers can be detached easily, thus preventing damage to the inner pipes
- ✓ ideal for cramped conditions on construction sites
- ✓ suitable for installation using horizontal directional drilling involving increased tensile forces
- ✓ optimally suited for installation along routes which preclude using open-trench installation (nature reserves, forest edges, canals etc.)
- ✓ system compatible with Multi-fit sealing (cf. Accessories p. 32)

Suitable for the following installation methods

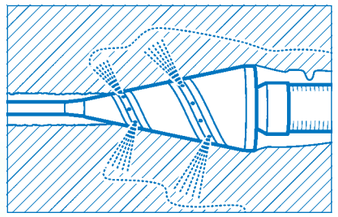
horizontal directional drilling (HDD)

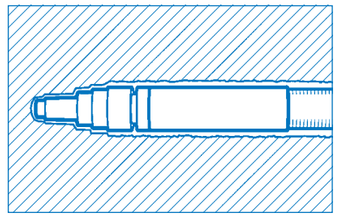
moling (impact mole)

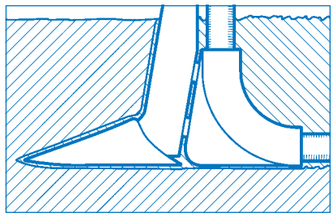
ploughing

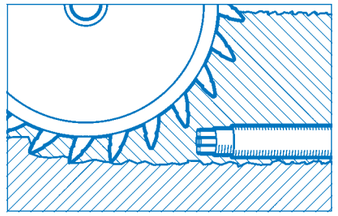
trenching

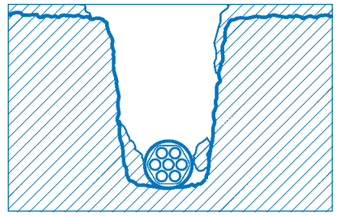
open-trench installation without a sandbed

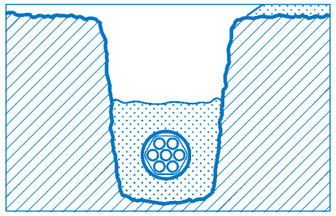
open-trench installation in a sandbed

High safety from damage due to a modified protective sheathing

When installing using the flush drilling method, pulling the bundle over stones hidden in the soil can damage the casing and the inner pipes. The modified double sheathing of the protec offers sufficient protection and the certainty that no inner pipes will be damaged and that there will be no reduction in the blowing performance.

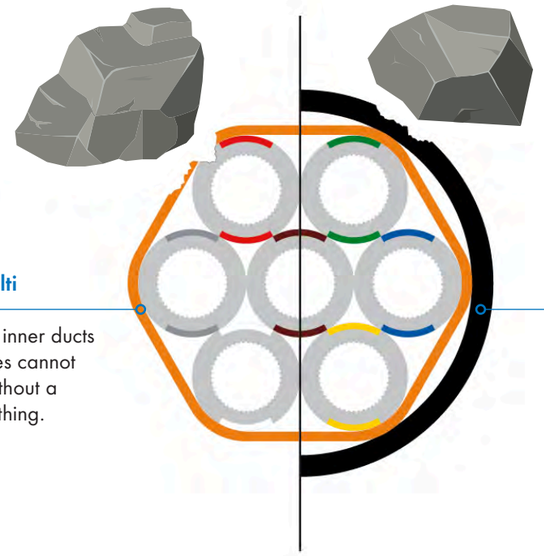

egeplast Microduct Multi

Damage to the inner ducts by coarse stones cannot be ruled out without a protective sheathing.

egeplast Microduct Multi protec

The modified protective sheathing prevents damage to the inner duct bundle.

egeplast

Microduct Multi

FTTC FTTB FTTH

The pipe-in-pipe solution – suitable for construction and expansion of new fibre optics routes

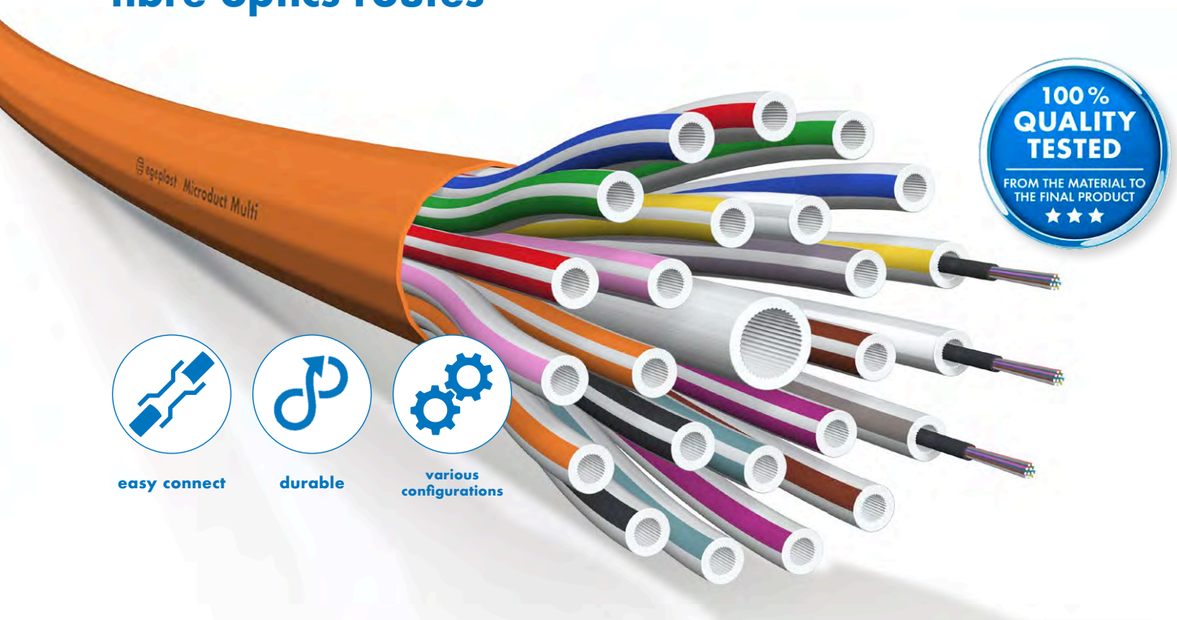

The egeplast **Microduct Multi** is a pipe bundle consisting of several egeplast Microduct Mono pipes for compact and straight installation. It can be used for the following installation methods:

In conformity with the VDE Guideline part 720: Material concept for FTTX Broadband networks

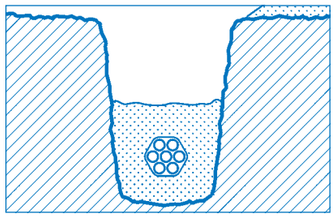

direct underground installation in a sandbed

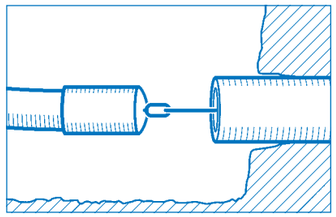

pulling in into protective pipes

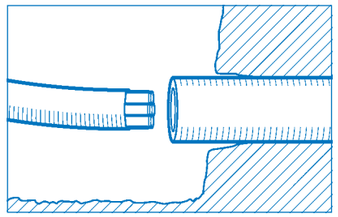

insertion into protecive pipes

The pipe bundle is provided in long delivery lengths, thus reducing the number of joints and ensuring faster processing on the construction site. The large variety of configuration options allows for optimal network planning and allocation.

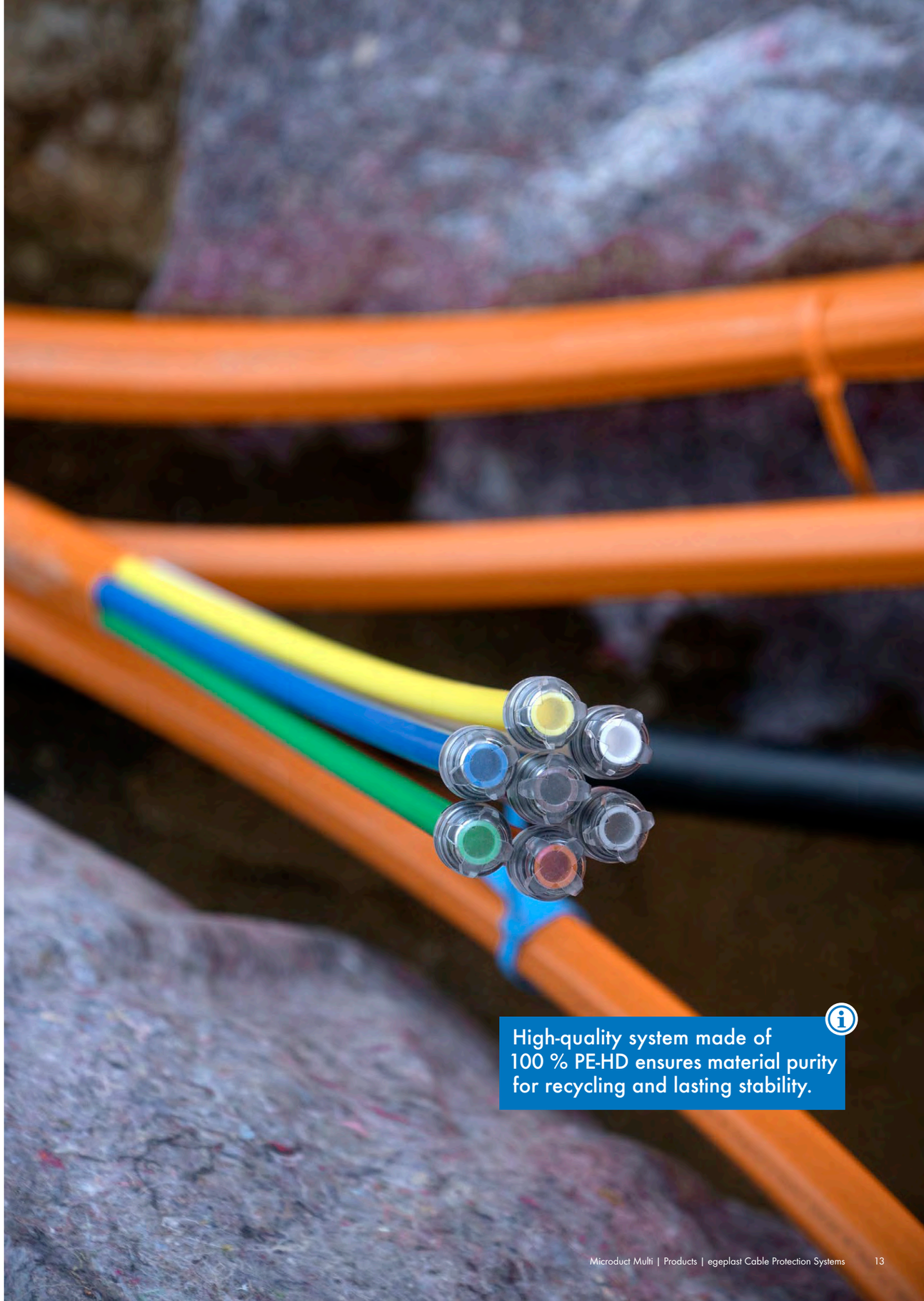

High-quality system made of 100 % PE-HD ensures material purity for recycling and lasting stability.

egeplast

Microduct Multi

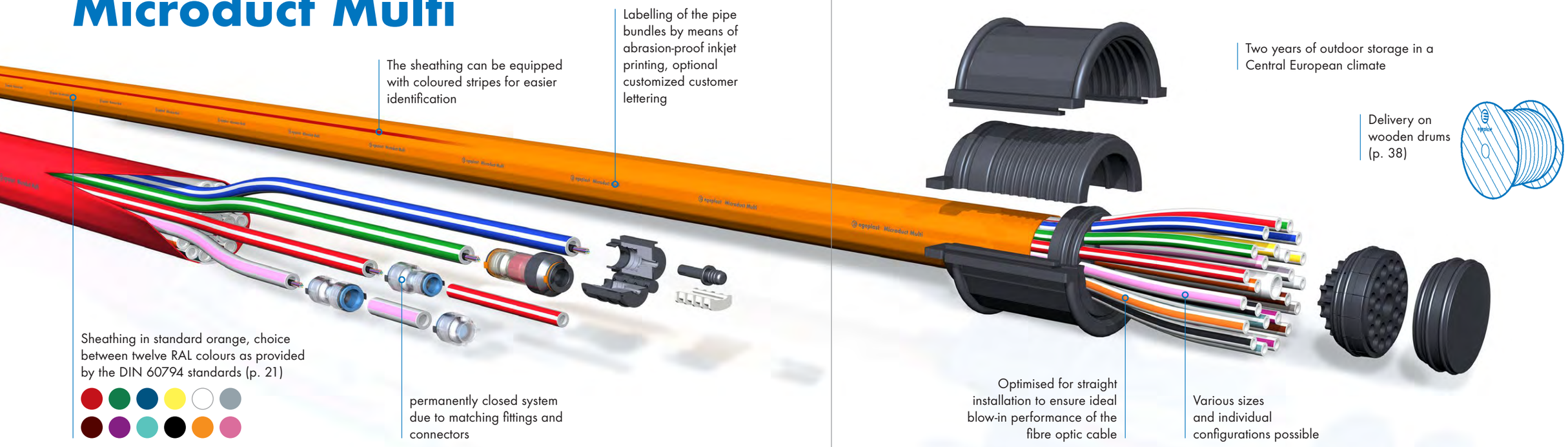

Dimensions and delivery lengths

egeplast Microduct Multi

OD/ID mono pipe [mm]	No. of mono pipes	OD outer sheathing (nominal) [mm]	Weight [g/m]	Delivery length [m]	
				on drum H 1.80	on drum H 2.40
7/4	2	15.5	83	1,900 m on small drums	
	4	20.1	118	5,000	-
	7	22.6	224	2,300	-
	8x 7/4 + 1x 12/8	27.6	321	–	4,000
	9x 7/4 + 1x 14/10	31.2	366	1,400	2,400
	12	29.7	365	1,500	4,000
	12x 7/4 + 1x 14/10	35.9	452	1,500	2,400
	22x 7/4 + 1x 12/8	41.5	702	750	1,950
	24	43.4	695	750	1,950
	24x 7/4 + 1x 14/10	42.4	766	750	1,950
10/6	2	21.8	145	3,500	–
	4	28.3	258	–	4,000
	7	32.0	413	1,400	3,000
	12	41.6	679	750	1,800
	19	52.0	1,046	–	1,100
12/8	2	25.5	177	3,000	–
	3	26.5	241	–	4,000
	4	31.8	314	–	4,000

egeplast Microduct Multi

OD/ID mono pipe [mm]	No. of mono pipes	OD outer sheathing (nominal) [mm]	Weight [g/m]	Delivery length [m]	
				on drum H 1.80	on drum H 2.40
12/8	5	37.5	387	–	2,400
	7	37.5	509	900	2,400
	7x 12/8 + 1x 16/12	40.5	601	–	2,000
14/10	2	29.5	210	3,000	–
	3	29.5	283	1,500	3,000
	4	36.7	372	1,500	3,000
	5	44.0	462	1,300	2,000
	7	44.0	608	800	1,800
16/12	2	33.2	243	1,800	4,800
	3	33.8	329	1,400	2,400
	4	43.6	436	–	2,400
	5	49.2	533	850	–
	7	49.6	704	–	1,200
	12	66.8	1,168	–	800
20/15	3	41.2	496	–	1,950
	4	49.5	649	–	1,500
	5	61.8	812	–	1,200

More variants and delivery lengths on request

egeplast

Microduct Mono

FTTC FTTB FTTH

Reliable micro-tube system for the protection of fibre optic networks

100 % QUALITY TESTED
FROM THE MATERIAL TO THE FINAL PRODUCT

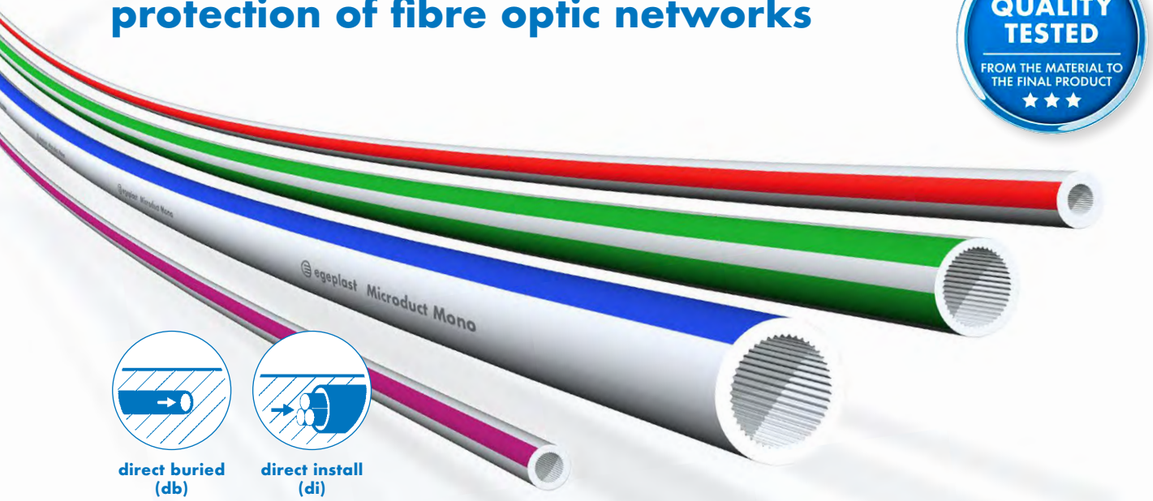

The egeplast **Microduct Mono** pipes are made of PE-HD and meet the highest requirements in fibre optic expansion. In particular, they can be used to create branches from new or existing pipe routes for connecting end customers or nodes.

The Microduct Mono pipes can be easily blown in, pulled in or pushed in. Basically, two different versions are possible:

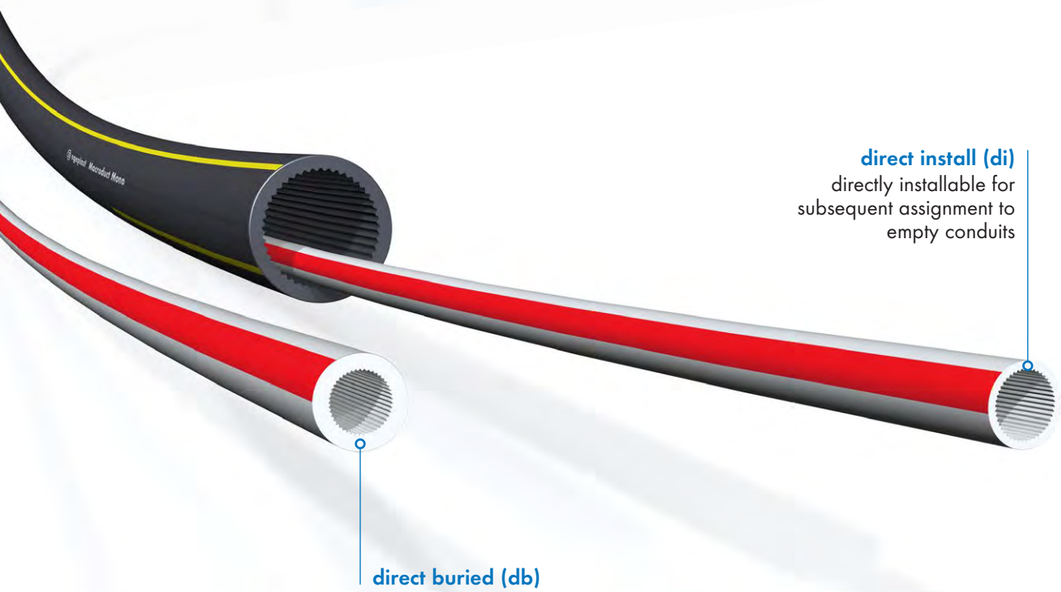

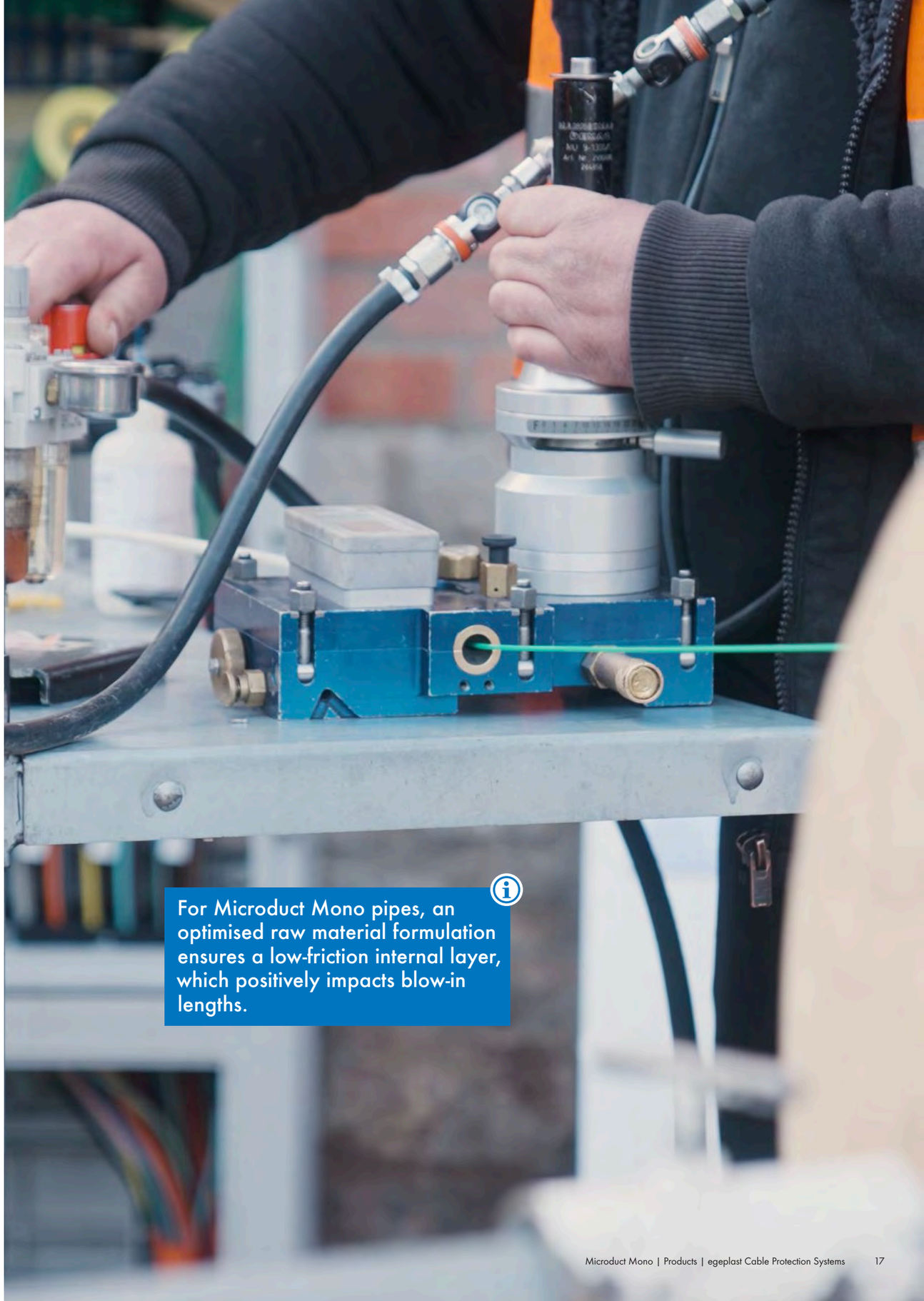

For Microduct Mono pipes, an optimised raw material formulation ensures a low-friction internal layer, which positively impacts blow-in lengths.

egeplast

Microduct Mono

The wall thickness of the db version ensures dimensional stability with high soil loads.

Special internal grooves generate an optimal air flow which can be used to achieve significant blow-in distances.

Designed for a useful life of 50 years minimum based on internal pressure creep stress test according to DIN 16874

USEFUL LIFE OF **50 YEARS** MINIMUM ★★★

The microducts made of PE-HD are marked with a durable permanent, abrasion-resistant inkjet printing. This is applied to the pipe at 1 m intervals and a character height of at least 3 mm. the pipe. On request, an individual customer signature with the following information possible:

- **Manufacturer's identification:** egeplast Microduct
- **Material:** PE-HD
- **Extruder**
- **Dimension in mm:** e.g. 14x2.0 mm
- **Production date:** (day, month, year) e.g. 01.01.2022
- **Number of metres:** e.g. 00001
- **Layer**

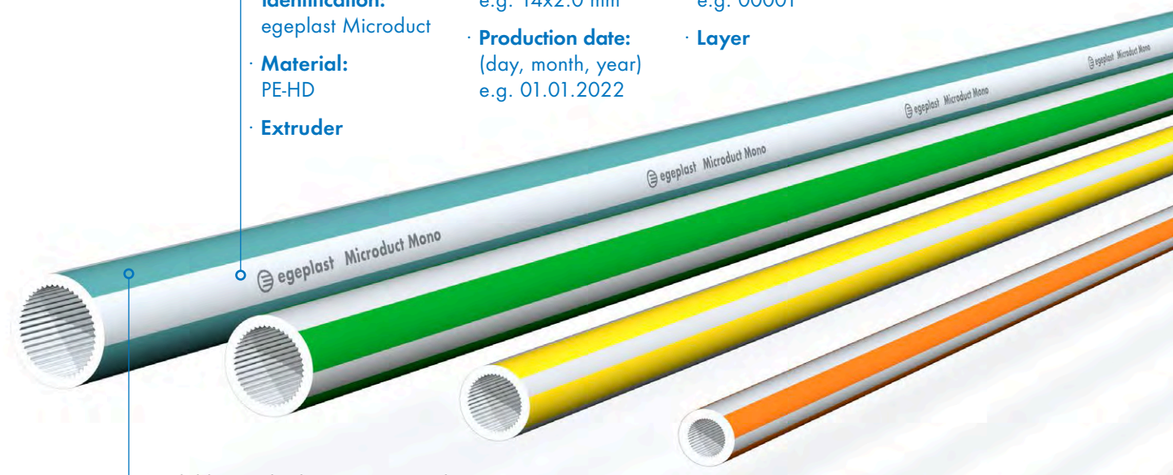

Available standard version ecru with identification stripes or optionally integrally coloured in twelve RAL colours (p. 21)

Makes it possible to branch off new or pre-existing pipeline routes to connect end customers or junctions

Air Flow

All egeplast Microducts are manufactured with internal ribbing as standard. This corrugation consists of a special friction-reducing material.

In a smooth tube, the air flow is not centered, creating turbulence that reduces the blow-in distance. Our corrugated inner surface creates a laminar airflow during the blow-in process, centering the fiberglass cable and thereby increasing blow-in distances. In addition, the special material of the corrugation reduces the friction to the cable to enable optimal blowing-in results.

In addition to the corrugation, many other factors influence the blowing distances (p. 62).

Dimensions and delivery lengths

egeplast Microduct Mono			
Version	**OD / ID [mm]**	**OD x s [mm]**	**Delivery Length [m]**
db (direct buried)	7 / 4	7 x 1.5	4,100
	10 / 6	10 x 2.0	2,000
	12 / 8	12 x 2.0	2,000
	14 / 10	14 x 2.0	1,700
	16 / 12	16 x 2.0	1,200
	20 / 15	20 x 2.5	1,500
di (direct install)	5 / 3.5	5 x 0.75	4,100
	7 / 5.5	7 x 0.75	4,100
	10 / 8	10 x 1.0	2,500
	12 / 9.8	12 x 1.1	2,000

Special versions

egeplast Microduct Air

The egeplast Microduct Air is a metal-free system which is optimally protected from the elements by means of a sturdy and UV-stabilised multi-layer sheathing. Since the egeplast Microduct Air does not require any civil engineering works, using the system is particularly useful in rural and mountainous regions, where pre-existing mast systems can be used.

We are also able to offer you customised special solutions. Please feel free to approach us!

egeplast Microduct OD

The egeplast Microduct OD (**O**rtungs**D**raht = location wire) allows for simple subsequent pipe localisation by means of a special electrical conductor. It allows for detection of pipes at a depth of up to six meters as well as for precise tracking of their position and of the pipe run in the soil.

egeplast Microduct LSOH

With the egeplast Microduct LSOH (**L**ow **S**moke free **O**f **H**alogen), you will fulfill the demanding requirements associated with the protection of telecommunication cables in network applications for in-house use. Their material meets the highest safety standards with regard to fire protection:

- ✓ No flame propagation in accordance with DIN EN 61386-1 (VDE 0605-1:2009-03)
- ✓ Reduced smoke density following DIN EN 61034-2 (VDE 0482-1034:2019-02)
- ✓ Free from halogens in accordance with DIN EN 60684-2 (VDE 0341-2:2012-05)

Intelligent colour concept: Bright colours prevent faulty assembly

Our practice-proven colour concept featuring deliberately bright colours makes identification of the connecting tubes or the relevant house connection much easier, sparing you from lengthy search or faulty assembly. According to DIN 60794, twelve colours are available to distinguish the individual microducts. In order to ensure that the microducts can be clearly distinguished, the pipes no. 1-12 are provided with two colour stripes, while the pipes 13-24 are provided with four colour stripes. Thus, you will be spared extensive search or faultyassembly.

Colours according to DIN 60794-1-1 (VDE 0888-100-1):

RAL 3020
Red
No. 1
No. 13

RAL 6001
Green
No. 2
No. 14

RAL 5015
Blue
No. 3
No. 15

RAL 1018
Yellow
No. 4
No. 16

RAL 9010
White
No. 5
No. 17

RAL 7045
Grey
No. 6
No. 18

RAL 8015
Brown
No. 7
No. 19

RAL 4005
Violet
No. 8
No. 20

RAL 6027
Turquoise
No. 9
No. 21

RAL 9005
Black
No. 10
No. 22

RAL 2003
Orange
No. 11
No. 23

RAL 3015
Pink
No. 12
No. 24

More RAL shades on request

egeplast

Macroduct Mono

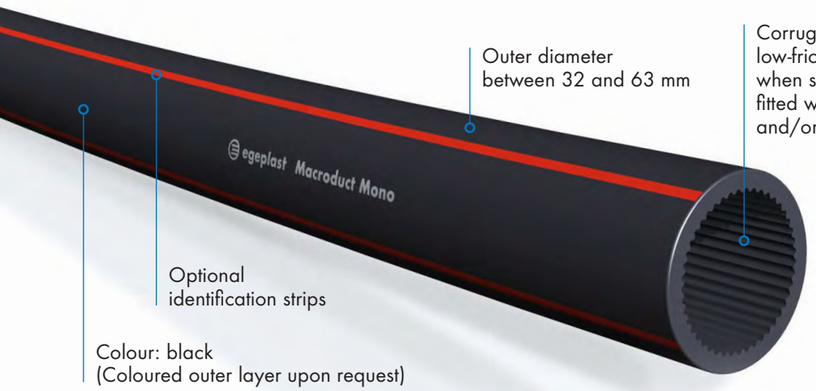

Outer diameter between 32 and 63 mm

Corrugations ensure low-friction insertion when subsequently fitted with microducts and/or cables

Optional identification strips

Colour: black
(Coloured outer layer upon request)

100 % QUALITY TESTED
FROM THE MATERIAL TO THE FINAL PRODUCT

Suitable for all types of installation

The **Macroduct Mono** is a cable protection pipe (conduit) made of high-quality polyethylene. It is primarily used to protect telecommunication cables (e. g. copper or fibre optic cables). Standard pipe can be fitted with optional extra features for special applications or with customer-specific signatures.

The standard cable protection pipe is available in three quality levels:

Pressure pipe quality following DIN 8074 (PE100)

Pipes in accordance with DIN 16874

Pipes in accordance with DIN 16876

The Macroduct Mono pipes are suitable for direct installation in cable ducts and -shafts or for insertion into larger empty conduits. In addition to classic installation methods (p. 52-59), the cable protection pipes can also be deployed for trenchless installation.

There are two options for bundling individual Mono pipes:

Macroduct Multi-S (with a back-to-back joint)
Macroduct Multi-L (loosely wound)

Dimensions and delivery lengths

egeplast Macroduct Mono						
SDR	OD [mm]	s [mm]	Delivery lengths for drums [m]			
			2.55 m	2.40 m	1.80 m	Coiled bundle
11	32	3,0	–	2,800	1,500	100
11	40	3,7	3,000	3,000	2,500	100
11	50	4,6	2,200	1,000	550	100
11	63	5,8	1,000	–	–	100

Alternative delivery lengths on request

egeplast

Macroduct Multi

Macroduct Multi-S

with a back-to-back joint

Customised features / combinations available

Macroduct Multi-S is an assembly of up to six cable conduits bundled together. This variant involves welding the adjacent empty conduits together with a back-to-back joint. The free spaces can easily be backfilled with soil material, avoiding cavities. The pipe compound can be partially or completely detached if required.

The individual Macroduct Mono pipes can also come equipped with additional performance features. For example, it is easily possible to combine products from the Macroduct Mono and Microduct Multi series (p. 12).

Macroduct Multi-L

loosely wound

We recommend using different coloured stripes for optimal differentiation between the pipe strands (see Intelligent colour concept, p. 21).

The **Macroduct Multi-L** is an assembly of up to five Macroduct Mono pipes. Here, the pipes are collectively wound on a drum, creating a loose bundle. This measure allows for simultaneous pulling in multiple cable protection pipes from the drum into the trench.

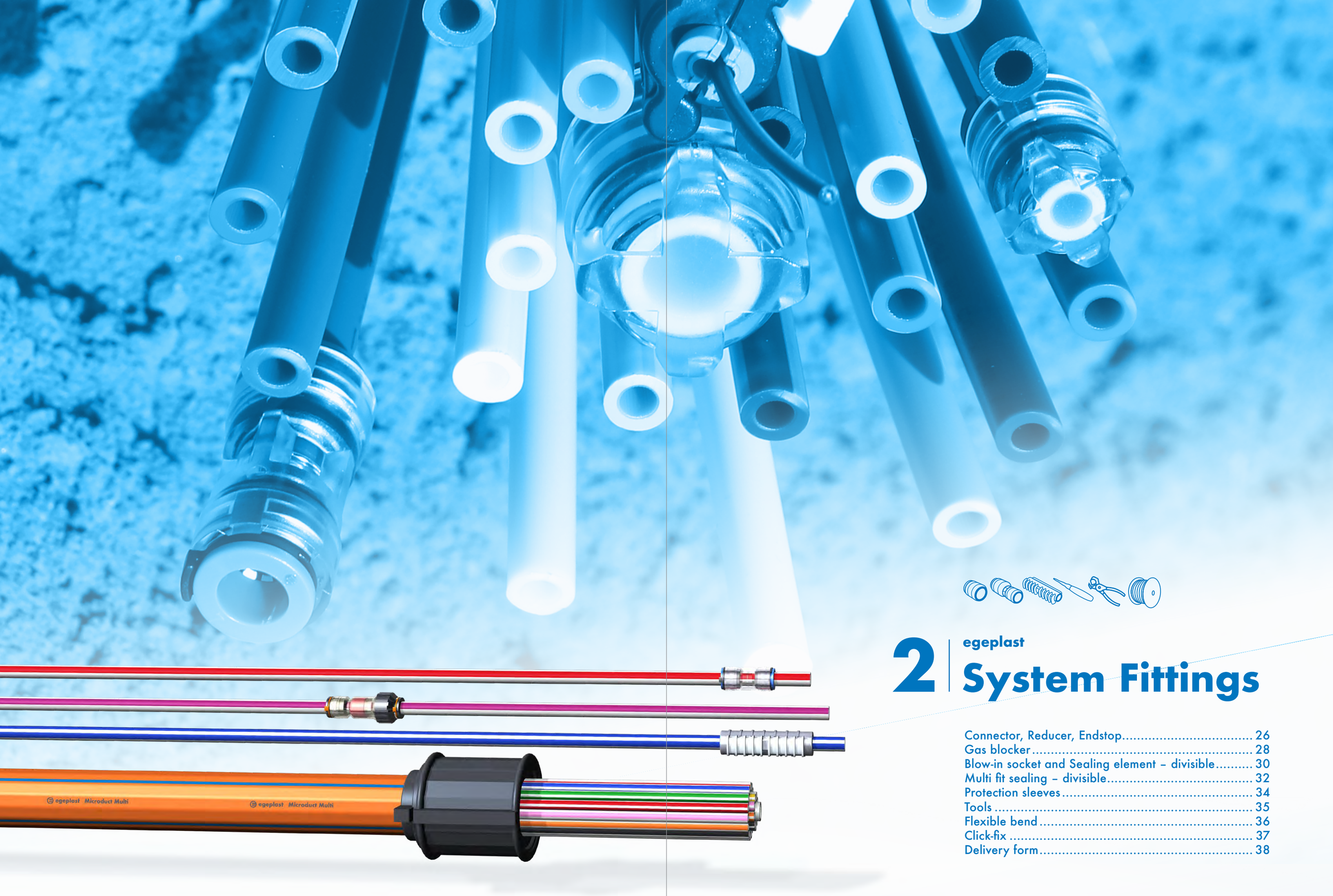

2 | egeplast System Fittings

Connector, Reducer, Endstop 26
Gas blocker 28
Blow-in socket and Sealing element – divisible 30
Multi fit sealing – divisible 32
Protection sleeves 34
Tools 35
Flexible bend 36
Click-fix 37
Delivery form 38

egeplast

egeFit® System Fittings

Connecting, reducing, sealing: Find the right solution for your system

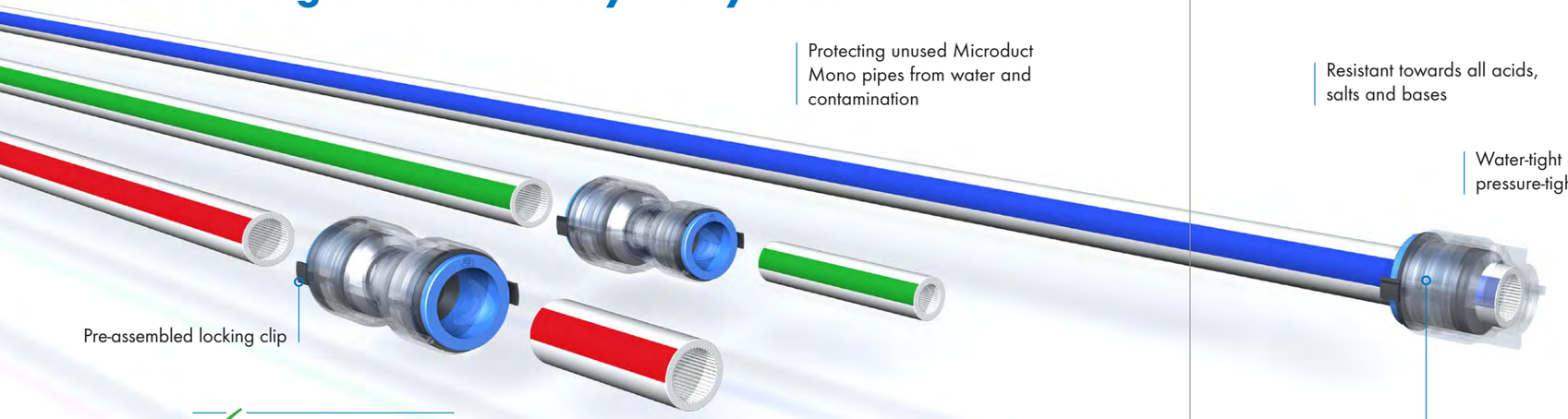

✓ Increased safety proven by means of a spade test

APPROVED BY TELEKOM

✓ DIN EN 50411-2-8 compliant

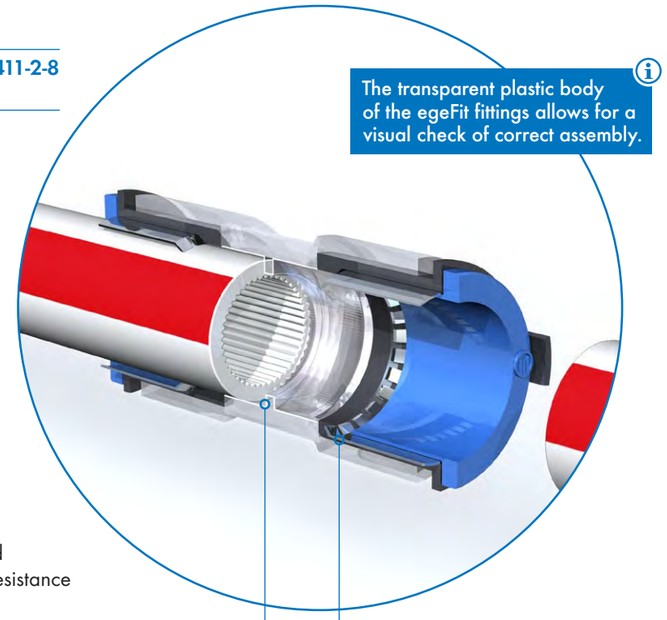

Only the right fittings will provide you with a reliable and safe micro tube system. Our fittings have been adapted perfectly to our individual pipes and are fast and easy to use.

Our connectors have been specifically developed for the purpose of connecting db and di egeplast Microduct Mono pipes to the highest quality standards. They are characterised by their tensile strength and pressure-tightness for up to 16 bar.

High-quality plastic is used to achieve optimum impact strengths without requiring an additional metal body. In addition, this also prevents corrosion-induced damage, thus ensuring flawless function even after many years.

egeplast egeFit® Connector

Microduct OD [mm]	Dimensions L x W [mm]	Quantity bag [pc.]	Quantity box [pc.]
7	34.6 x 14.9	50	1,000
10	42.8 x 18.5	50	1,000
12	48.2 x 21.0	50	1,000
14	50.6 x 24.9	25	400
16	53.8 x 27.8	25	300
20	60.2 x 33.0	25	200

egeplast egeFit® Reducer

Microduct OD/ID pipe 1 on OD/ID pipe 2 [mm]	Dimensions L x W [mm]	Quantity bag [pc.]	Quantity box [pc.]
12/8 on 10/8	45.4 x 21.0	25	500
14/10 on 12/10	50.4 x 23.7	25	250

egeplast egeFit® Endstop

Microduct OD [mm]	Dimensions L x B [mm]	Quantity bag [pc.]	Quantity box [pc.]
7	18.8 x 14.9	50	2,000
10	23.0 x 18.5	50	1,000
12	26.0 x 21.0	50	1,000
14	27.2 x 24.9	50	800
16	29.8 x 27.8	50	600
20	33.4 x 33.0	50	400

Gas blocker

egeplast Gasblock Connector

Microduct OD [mm]	Gasket area [mm]	Gasket colour	Dimensions L x W [mm]	Quantity [pc.]
7	0.5 – 3.5	blau	66.8 x 22.5	25
	3 – 5	rot		25
10	0.5 – 3	blau	75.0 x 27.0	20
	3 – 6	rot		20
	6 – 8	gelb		20
12	3 – 6	rot	79.3 x 30.5	20
	6 – 8	gelb		20
	8 – 10	grün		20
14	3 – 6	rot	82 x 31.5	15
	6 – 8	gelb		15
	8 – 10	grün		15
16	6 – 8	gelb	89.4 x 35.0	10
	8 – 10	grün		10
	10 – 12	schwarz		10

egeplast Gasblock Endstop

Microduct OD [mm]	Gasket area [mm]	Gasket colour	Dimensions L x W [mm]	Quantity [pc.]
7	0.5 – 3	blau	35.6 x 18.0	100
	2.6 – 4	rot		100
10	0.5 – 3	blau	42.5 x 22.5	25
	3 – 6	rot		25
	6 – 8	gelb		25
12	3 – 6	rot	46.7 x 25.0	25
	6 – 8	gelb		25
	8 – 10	grün		25
14	3 – 6	rot	47.7 x 27.0	25
	6 – 8	gelb		25
	8 – 10	grün		25
16	6 – 8	gelb	55.2 x 30.0	20
	8 – 10	grün		20
	10 – 12	schwarz		20

Separable connector (EBM)

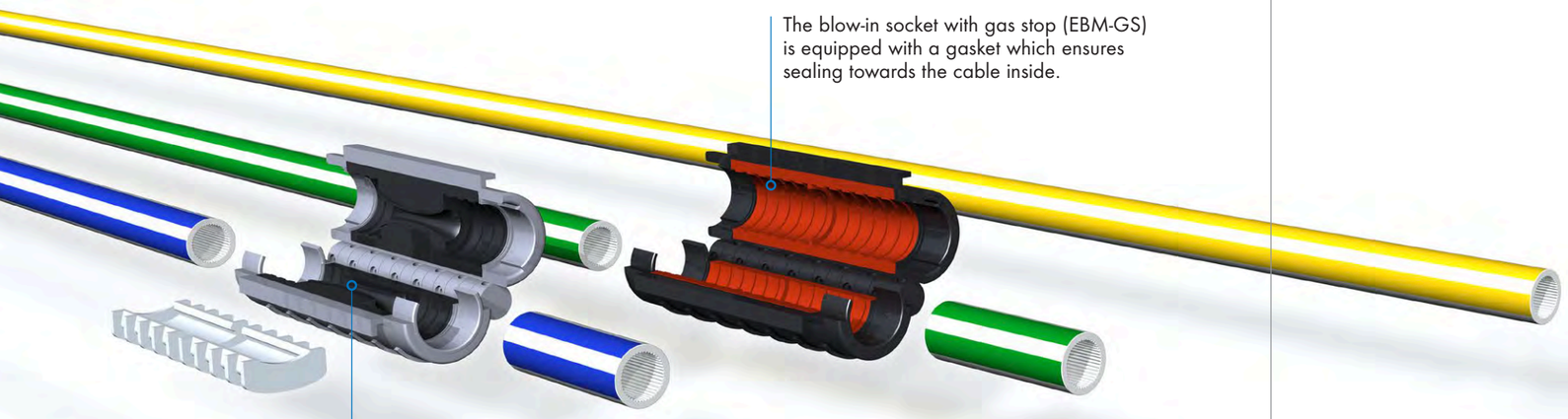

The blow-in socket with gas stop (EBM-GS) is equipped with a gasket which ensures sealing towards the cable inside.

The blow-in socket is a divisible micro pipe connector made of plastic which is used for repair work on gas- and water-tight connections of either used or unused Microducts.

Produkt benefits

- ✓ reusable
- ✓ gas stop: water-tight and pressure-tight up to 0.5 bar
- ✓ high pull-out resistance
- ✓ quick and easy assembly without tools
- ✓ buriable
- ✓ for subsequent sealing of Microducts which are in use

egeplast EBM

Designation EBM	Designation EBM-GS	Gasket area of cable (EBM-GS only)	Dimensions L x W [mm]	Quantity [pc.]
EBM 7	EBM-GS 7	2.3 – 3.9 mm	68 x 26.7	30
EBM 10	EBM-GS 10	5.0 – 6.5 mm	78 x 29.8	25
EBM 12	EBM-GS 12	5.0 – 6.5 mm	78 x 33.3	20
EBM 14	EBM-GS 14	6.7 – 9.3 mm	88 x 39	15

Separable sleeve – divisible (EZA-t)

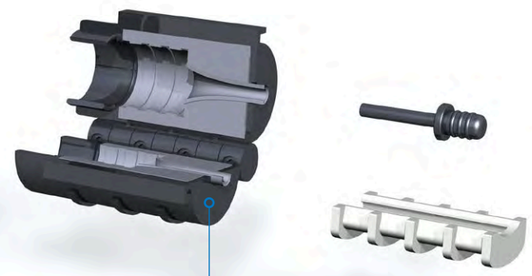

This divisible sealing element (EZA-t) is used to seal both used or unused Microduct Mono pipe ends.

Produkt benefits

- ✓ reusable
- ✓ gas stop: water-tight and pressure-tight up to 0.5 bar
- ✓ high pull-out resistance
- ✓ quick and easy assembly without tools
- ✓ buriable
- ✓ for subsequent sealing of Microducts which are in use

egeplast EZA-t

Designation	Gasket area of cable	Dimensions L x W [mm]	Quantity [pc.]
EZA-t 7	2.3 – 3.9 mm	37 x 26.7	40
EZA-t 10	1.8 – 4.5 mm	42 x 29.8	40
EZA-t 10	4.5 – 6.5 mm	42 x 29.8	40
EZA-t 12	5.0 – 7.7 mm	42.5 x 33.3	25
EZA-t 14	4.6 – 7.4 mm	55 x 40	20
EZA-t 14	6.5 – 8.5 mm	55 x 40	20

Multi fit sealing – divisible (MfA-t)

The egeplast **Multi fit sealing** is used for gas- and water-tight sealing between the individual microducts and the surrounding sheathing or protective pipe.

Adapted to the multitude of pipe configurations, we offer you a wide range of sealing discs suitable for both occupied and unoccupied pipe.

APPROVED BY TELEKOM

Design:
two divisible outer shells and inner layers

Application:
sealing of the inner pipes against the outer sheathing

Product benefits

- ✓ **easy assembly**
- ✓ **metal-free**
- ✓ **tension-free and fixed inner pipes in the sealing element**
- ✓ **no risk of faulty assembly**
- ✓ **permanently pressure-tight up to 0.5 bar**
- ✓ **divisible and reusable**

egeplast MfA-t Macroducts

Type overview MfA-t		Quantity [pc.]
MfA-t - 50	7x 12	12
MfA-t - 50	8x 10	12
MfA-t - 50	2k*	12
MfA-t - 40	5x 10	12
MfA-t - 40	k* + 3x 10	12
MfA-t - 32	3x 10	12

*k = cable (cable 1: 10,5/16.0 mm; cable 2: 10.5/16.0/25.5 mm)

egeplast MfA-t Microduct Multi

Type overview MfA-t - MD-Multi		Quantity [pc.]
MfA-t - MD-Multi	24x 7 + 1x 14	12
MfA-t - MD-Multi	22x 7 + 1x 12	12
MfA-t - MD-Multi	16x 7 + 3x 12	12
MfA-t - MD-Multi	12x 7 + 1 x 14	12
MfA-t - MD-Multi	8x 7 + 1x 12	12
MfA-t - MD-Multi	7x14	12
MfA-t - MD-Multi	7x12	12

Protection sleeves

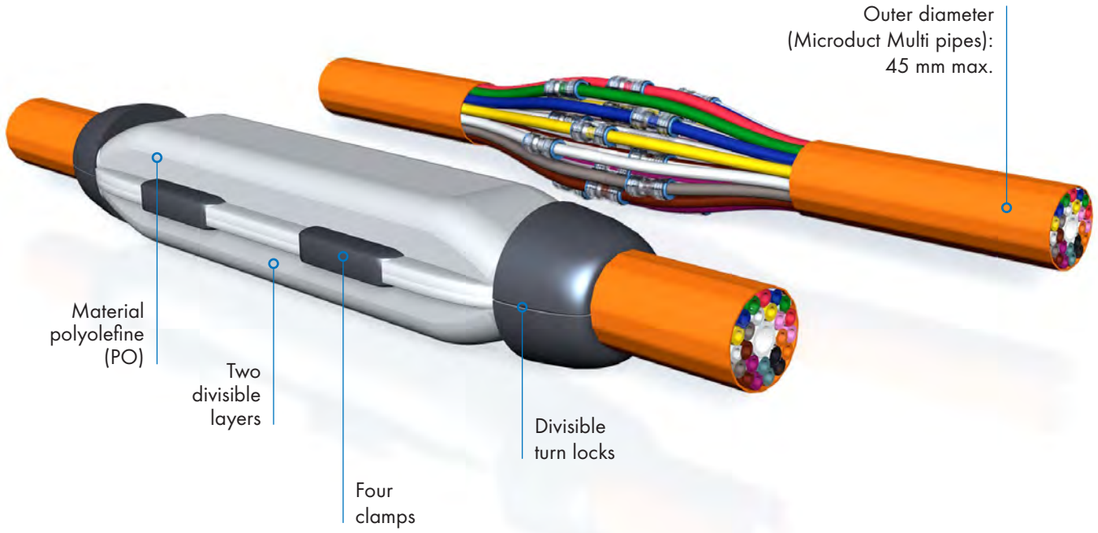

Product benefits

- ✓ extra protection of connectors
- ✓ protection from mechanical damage to connectors and exposed Microducts
- ✓ strain relief thanks to locking mechanism of the Microduct Multi pipes
- ✓ suitable for direct burial
- ✓ easy assembly

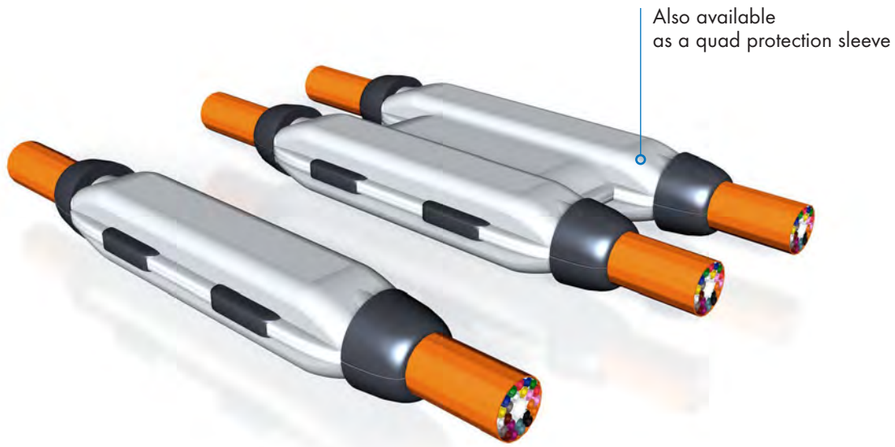

Tools

The tools can be used for cutting Macroduct Mono pipes and Microduct Mono pipes as well as for stripping Microduct Multi pipe bundles.

Pipe sheathing cutter

suitable for performing circular cuts for Microduct Multi pipes in particular to facilitate sheathing opening

Pipe cutter with a triangular blade

suitable for straight cutting off cutting of unoccupied Microduct Mono pipes, replacement blades available

Pipe scissors

suitable for chip-free separation of Macroducts and Microduct bundles

Tool 5/20 (calibration mandrel)

To even out ovality following cutting of egeplast Microducts with an outer diameter from 5 to 20 mm

Stripping knife

to perform longitudinal cuts when stripping the Microduct Multi pipes

Sheathing milling tool

suitable for stripping of Microduct Multi protec; precise depth adjustment allows for easy stripping of Microduct Multi protec

Flexible bend

APPROVED BY TELEKOM

The egeplast **flexible bend** is an ideal complement to the Macroduct pipe range. It is a flexible pipe bend system which can be used to realise changes of direction below the permissible bending radius of the pipe. As a result, it can be used e. g. to avoid obstacles or third-party installations on the pipeline route or to compensate height or lateral offsets. The flexible bend is particularly suitable for connecting a street cabinet.

Product benefits

- ✓ **fine-sand-tight or pressure-tight (0.5 bar inside and outside) versions available**
- ✓ **push-fit system: The length can be adjusted as required using a suitable tool**
- ✓ **versatile applications**
- ✓ **pressure-tight: outer diameter from 50 to 110 mm**
- ✓ **fine-sand-tight: outer diameter from 50 to 160 mm**

Versions:

Standard version pressure-tight
unilateral socket with a gasket and spigot end
delivery lengths 1 m or 2 m resp.

Standard version fine-sand-tight
unilateral socket with a gasket and spigot end
90° long version or 45° short version

egeplast Flexible bend

Pressure-tight version (0.5 bar inside and outside)

Bend (ready for assembly)			
OD [mm]	L [mm]		r [mm]
50	1,000	2,000	1,300
110	1,000	2,000	1,300

Click-fix

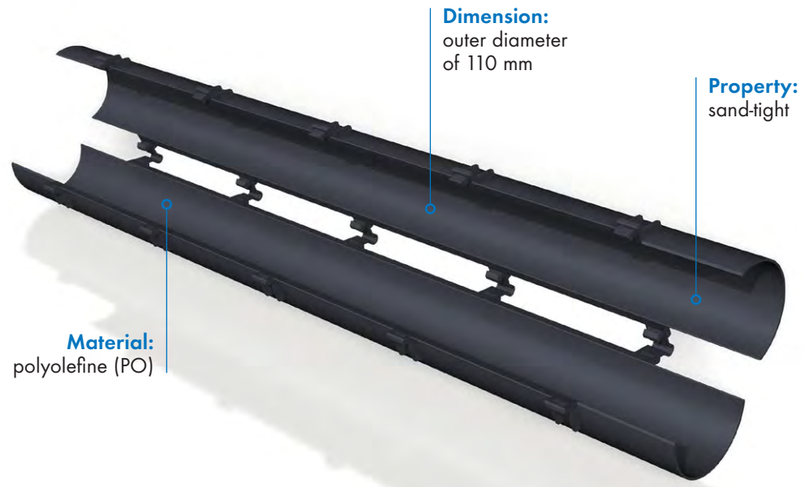

The egeplast **Click-fix** repair unit is used for rapid repair of damaged pipelines and is available as a sand-tight version. It is easy to install and does not require any double sleeve.

egeplast Flexible bend

Fine-sand-tight version

Bend with sleeve (90°, long version)			Bend with sleeve (45°, short version)		
OD [mm]	L [mm]	r [mm]	OD [mm]	L [mm]	r [mm]
50	710	500	50	445	500
63	905	630	63	600	630
75	1,060	750	75	660	750
90	1,275	900	90	770	900
110	1,275	1,100	110	910	1,100
125	1,875	1,250	125	1,100	1,250
140	2,105	1,400	140	1,220	1,400
160	2,110	1,600	160	1,180	1,600

Delivery form

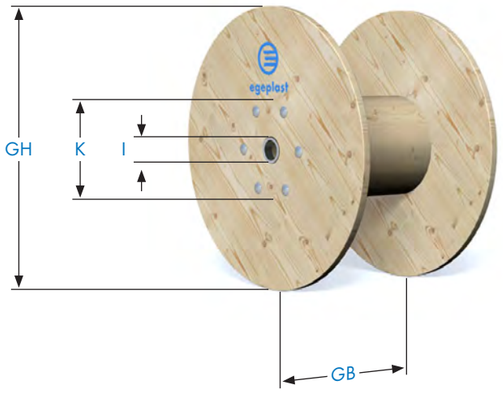

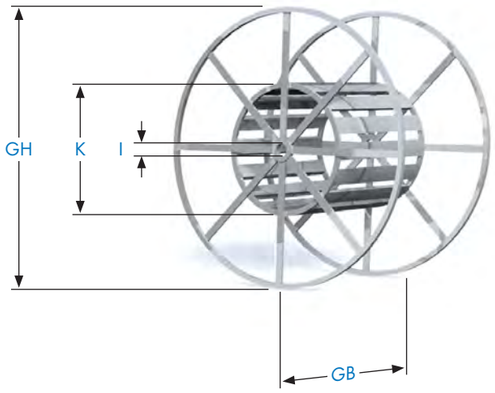

Material	GH [mm]	GB [mm]	K [mm]	I [mm]	Empty weight [kg]
steel	2,550	1,600	1,200	125	230
wood	700	380	480	80	7
wood	1,200	380	485	80	28
wood	1,800	1,050	900	110	186
wood	2,400	1,200	1,200	130	350

GH = Total height; GB = Total width; K = Core diameter; I = Core inner diameter;
information might differ

Free pickup service for empty drums from the construction site

It is pretty easy: egeplast provides you a form sheet for reporting empty drums. Simply use the QR code to access it in the most convenient way and send it to us once you have completed it. For the sake of sustainability and to protect the environment, we strive to avoid multiple journeys, so your empty drums might only get picked up after a relatively long waiting period if the number of units is low.

To reduce unneccessary wood consumption, we want to reuse the drums. We therefore ask you to handle the drums responsibly and with care (cf. Instructions of storage p. 47).

Reporting empty drums

We attach great importance to the careful use of resources. For this reason, we pick up empty egeplast-wooden drums from our customers free of charge.

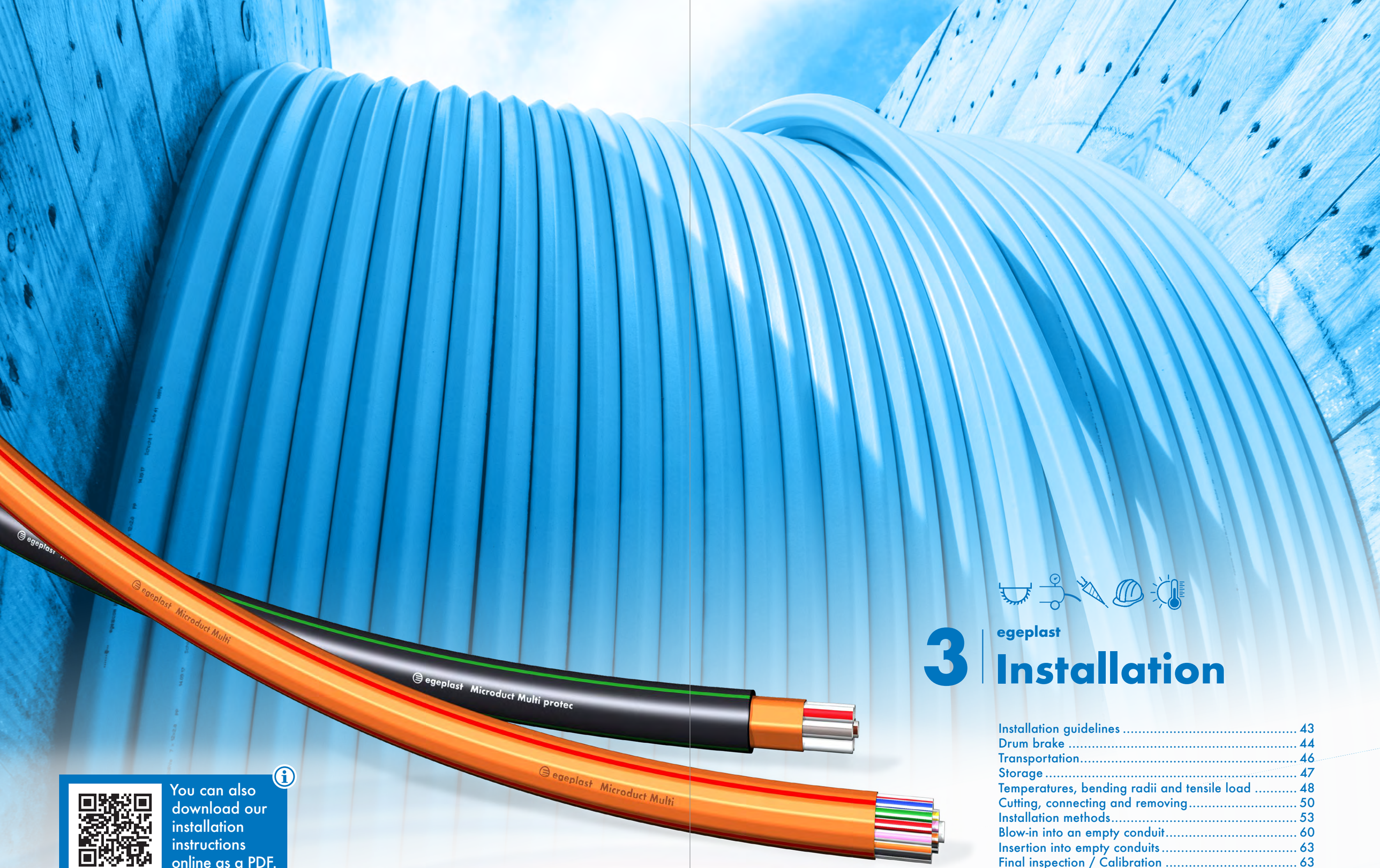

You can also download our installation instructions online as a PDF.

3 | egeplast Installation

Installation guidelines 43
Drum brake 44
Transportation 46
Storage 47
Temperatures, bending radii and tensile load 48
Cutting, connecting and removing 50
Installation methods 53
Blow-in into an empty conduit 60
Insertion into empty conduits 63
Final inspection / Calibration 63
Setting up a house connection 64

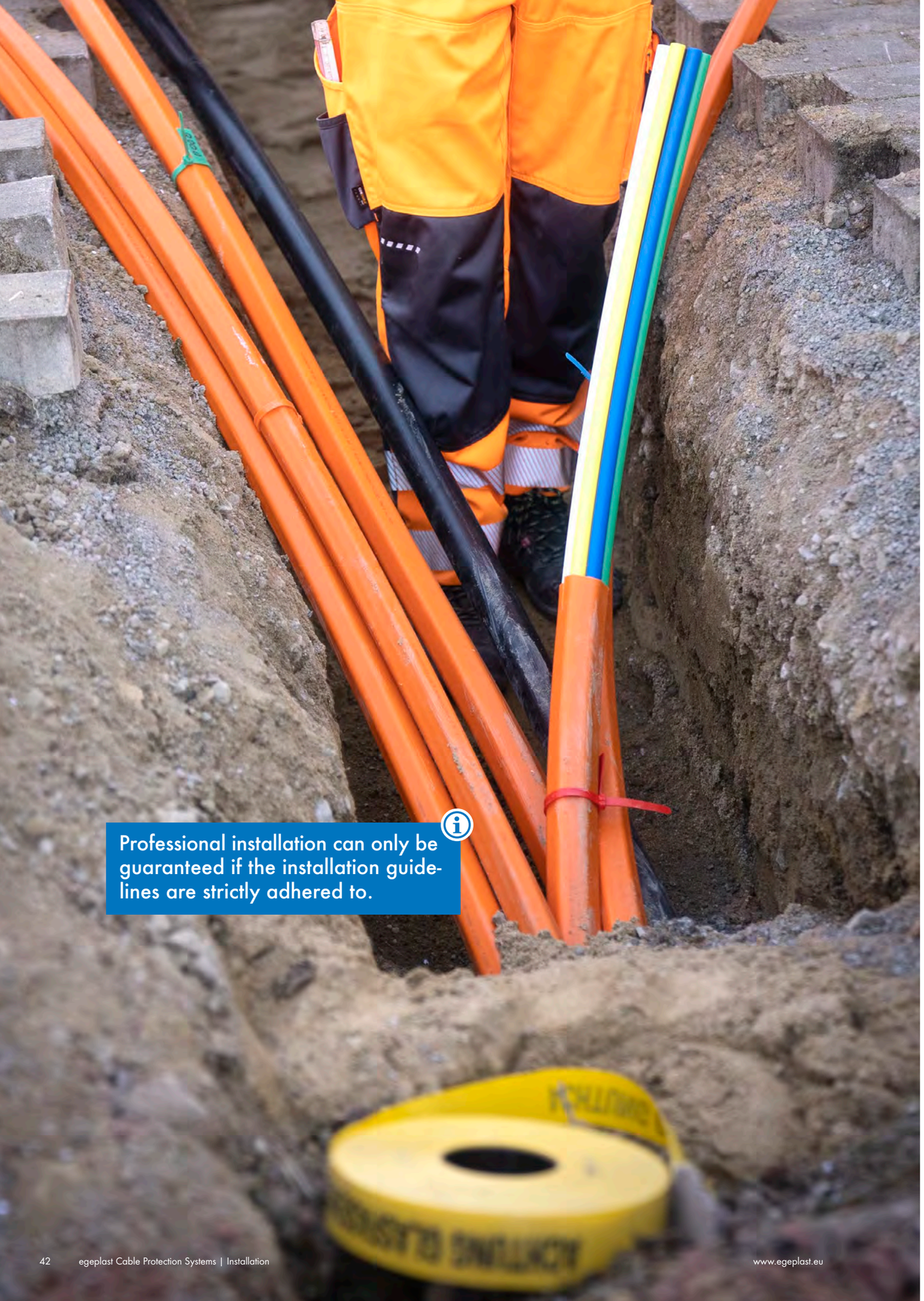

Professional installation can only be guaranteed if the installation guidelines are strictly adhered to.

Instructions for the installation, transportation and storage of pipes and drums

In addition to using proper and intact products, skillful installation of the micro tubes including the appropriate accessories is required for establishing a high-quality FTTX network. The installation guidelines as well as the instructions on transportation and storage below provide a detailed description of the recommended handling of the egeplast products, thus enabling you to safely expand your fibre optic network.

egeplast will gladly offer you an installation training in our headquarters in Greven or directly on site. We will be available to answer your technical questions basically anytime.

+49 2575 9710-0
www.egeplast.eu

Installation guidelines

- The pipes must always be handled with care. Do not pull them over sharp edges or rocks, since this might lead to damages. Check the pipes for external intactness before any installation.
- The inside of the pipes is to be protected from contaminations and water at all times by taking appropriate measures.
- The permissible deflection radii must not be exceeded when laying out the pipes.
- Particular care should be taken to ensure that the drum has to be unwound from underneath and the ducts are inserted into the trench in compliance with the permissible bending radii. In doing so, you must ensure to rule out any damage to the pipes.
- For drums and coils, you must absolutely bear in mind that the pipe end might spring away as soon as the fastening is removed. Improper handling might result in a risk of injury.

Drum brake

For optimal blow-in results, use a proper installation pattern. Winding the duct bundles onto a wooden drum leads to a wound orientation. To install the ducts into a trench, pull them off linearly from underneath the duct and with increased tension. To do so, **using a drum brake is a must**, because only then the pipe bundle will be under tension during the entire installation operation. This is the only way to ensure that the required traction force is transmitted to the pipe bundle to enable you to undo the winding tensions in a controlled way. In doing so, the maximum traction forces must not be exceeded. Unwinding the ducts from above or via the side flange is not permitted.

Since the tendency of spiraling increases along with a higher number of inner pipes, it should be counteracted by a proportionately higher pull-off force. In addition, stiffness of the pipe increases with low temperatures, meaning that in this case, too, higher braking force needs to be applied. To prevent potential spiraling, the pipe which has been laid in the trench can also be stabilised additionally by weighting it with sand.

We do not recommend forming coils from the drum since coils are difficult to straighten.

Failure to comply with the instructions listed here may result in a strong run-out of the pipe bundles, which would make installation significantly more difficult and drastically reduce subsequent blow-in performance.

Therefore, please observe the following instructions:

1. **Use a drum brake.**
2. **Unwind from below and insert into the trench from below in a shallow, curved arc.**
3. **Adjust the force used to the number of inner pipes and to the temperature.**
4. **Preferably stabilise with the help of piles of sand.**

Drum emergency brake made by Vetter

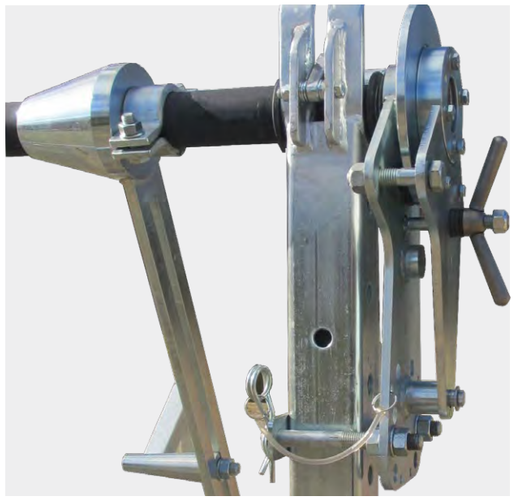

Drum brake made by Bagela

Transportation

All egeplast products are to be stored, transported and processed in a way which ensures that no damages or deformations can occur.

Both when receiving the pipes as well as when laying them it is always advisable to visually inspect the pipes for damages in transit.

Loading must be carried out using a lifting beam.

Knocking the drums over is not permissible. The drums should always be stored standing upright.

We recommend using a drum cone to ensure optimum support on the shaft of the drum carrier.

The drums should exclusively be loaded or moved around using appropriate equipment and always perpendicular to the winding direction.

Lift the drums with a lifting beam.

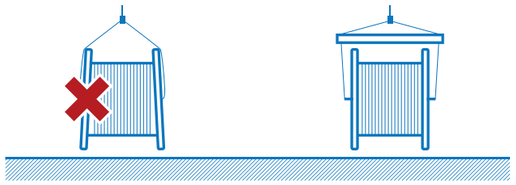

Lifting the drums only via the wooden wheels.

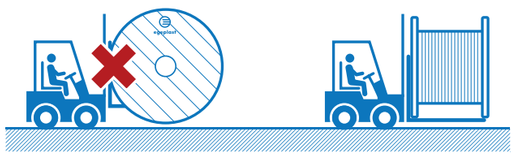

Do not knock over the drums!

Do not push the drum, only lift it.

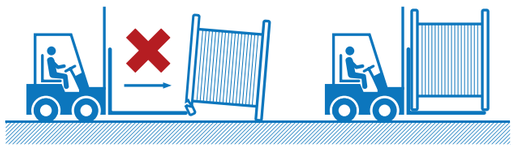

Storage

The pipes come blocked with shrink caps on both sides ex works. In the event of residual lengths on the wooden drum the end pieces of the individual pipes are to be sealed using egeFit end stops. This measure provides protection from contamination and water and is the only way to ensure that the blow-in range will not be impaired.

The drums are to be stored on firm and level ground free from rocks and sharp objects. They should be secured against unintended rolling by means of wedges or with the help of other suitable fixtures.

The pipes are wrapped with a UV-resistant protective foil in our factory, extending the time period for open storage by another year.

Remaining lengths on the drum are always to be fastened tightly to prevent the outer layer from becoming loose which will cause spiraling during subsequent installation.

Store drums in a dry place.
Always close the ends of the tubes.

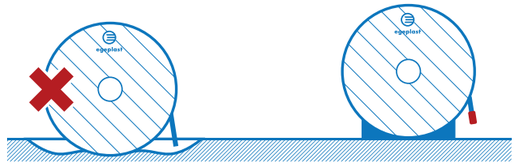

Store the drum level and secure it against rolling away.

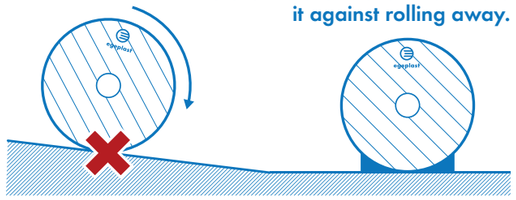

Pull off the pipes only from below and with the help of a drum brake.

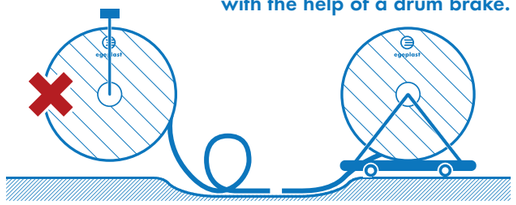

Attention! I am recyclable material, please handle with care and consideration to enable me to be reused.

Temperatures, bending radii and tensile load

Temperature-related limits of use

At high temperatures (> 50° C), mechanical stress can result in deformation of the pipes quicker. At low temperatures (< -10° C), however, impact sensitivity will increase. At temperatures below freezing, the pipes should be stored in a heated environment before installation for 12 to 24 hours. Heating with open flames is not permissible.

At temperatures below freezing, the drums should be stored in a hall, since they are much easier to handle once they have been warmed up.

Area	Permissible temperature range
Transportation & storage	-10°C – 50°C
Installation	-10°C – 50°C
Blow-in	-5°C – 35°C
Operation	-20°C – 60°C
Ideal temperature Tensile load	5°C – 20°C

Smallest permissible bending radius

Dropping below the smallest permissible bending radii should be avoided. This value will depend on the pipe temperature.

To allow for optimum blow-in performance, the bending radius always needs to be the largest one possible.

Pipe temperature	Smallest permissible bending radius R
20° C	20 x OD
10° C	35 x OD
0° C	50 x OD

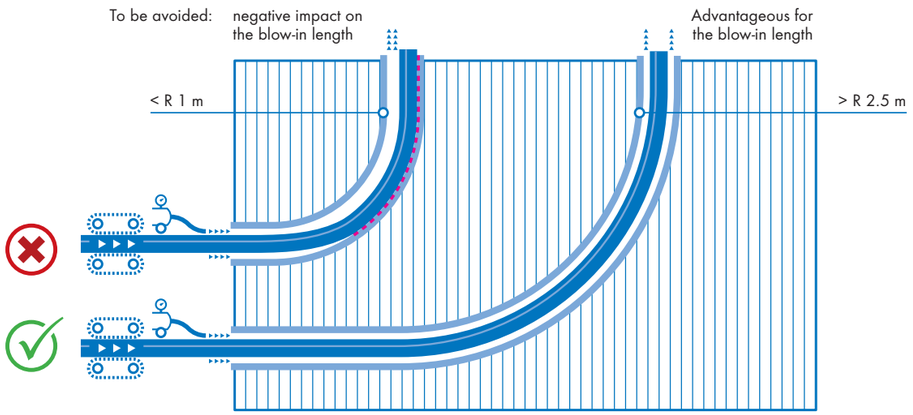

Maximal permissible tensile loads

The permissible tensile loads listed in the table are applicable for pipes made of PE-HD at an ambient temperature of 20 °C. We recommend to monitor and document the tensile loads occurring at the time of installation. Exceeding the maximum permissible tensile loads will result in permanent pipe damage and needs to be prevented by taking appropriate measures. Microduct Multi pipes are pulled in by means of a suitable pulling head or pulling grip. Please ensure an even distribution of loads affecting the pipe bundle.

Maximum permissible tensile loads for egeplast Microduct Mono pipes				
OD [mm]	di		db	
	s [mm]	F_{zul} [N]	s [mm]	F_{zul} [N]
7	0.75	150	1.50	260
10	1.00	250	2.00	490
12	1.10	350	2.00	620
14	–	–	2.00	750
16	–	–	2.00	850
20	–	–	2.50	1,300

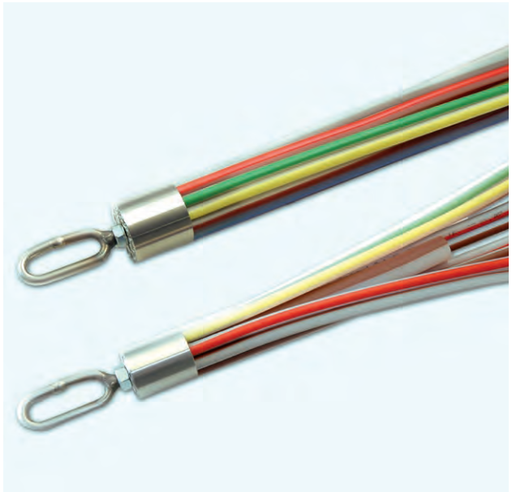

Pulling head made by Vetter

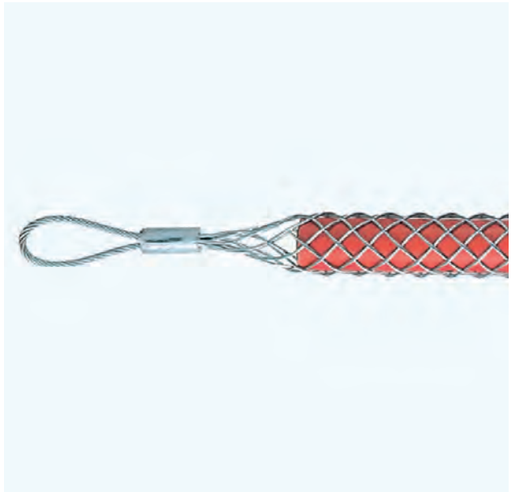

Pulling grip made by Vetter

Cutting, connecting and removing

Cutting

Any cutting work on egeplast Microducts or Microduct Multi bundles should be performed using the appropriate tools. The blades should be sharp to avoid squeezing of the pipe. Moreover, any chip formation is to be avoided. It is therefore not allowed to use saws, carpet knives or an angle grinder for cutting. The pipes must be cut straight and perpendicular to the axis. After cutting, chips, if any, should be removed and any ovalisations should be rerounded using the 5/20 tool (calibration mandrel).

Attention: A neat cut is essential for proper assembly of accessories as well as for optimal blow-in performance.

Connecting and removing Microducts

After cutting, Microduct Mono pipes can be coupled with the help of egeFit® connectors.
Slide the connector onto the pipe as far as possible. Check the seat of the connector by pulling slightly.
You can undo the connection following removal of the safety clip by pushing in the clamp sleeve while simultaneously pulling the pipe out.

Microduct Multi pipes require a staggered mounting of the connectors. The detached sheathing can be reattached afterwards to provide additional protection and sealed with adhesive tape. To seal the pipe bundles at the interfaces, divisible multi-fit seals (p. 32).

1. Using the 5/20 tool

2. Mounting a connector

3. Pulling the safety clip, dismantling

4. Fully through-connected Microduct

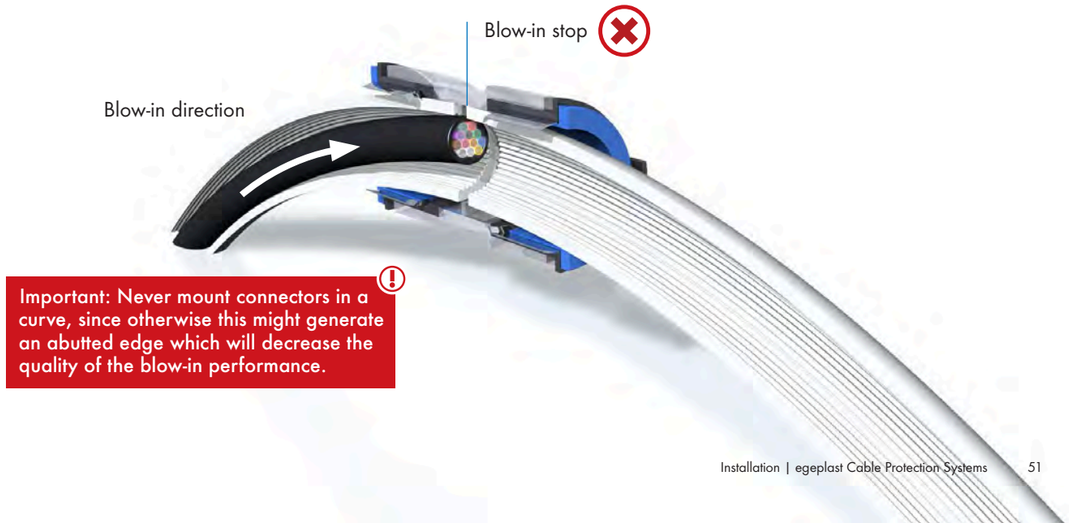

Important: Never mount connectors in a curve, since otherwise this might generate an abutted edge which will decrease the quality of the blow-in performance.

Installation methods

Open-trench installation

When inserting the pipes into the trench, mechanical damages must be prevented: Pulling the pipes across sharp edges as well as kinking of pipes or impact stress are inadmissible. The pipe should be inserted into the trench as flat as possible and respecting the admissible bending radii and traction forces (p. 48/49). Also, the pipes have to be as straight as possible during laying. Any lateral unwinding from drums and coils is to be avoided at all cost, since it will result in spiraling torsions which can no longer be straightened and drastically reduce blow-in lengths. For direct-buried installation, sealing the pipes is of great significance, since any penetration of water and contamination needs to be avoided.

If multiple pipe bundles are installed parallel to each other, the distance between them should equal no less than the width of one pipe bundle.

Owing to the material properties of PE-HD, cold deformation will only have been completed after approx. 1000 hours. During these 1000 hours, the individual Microducts in the pipe bundle might get damaged as a result of incorrect compaction.

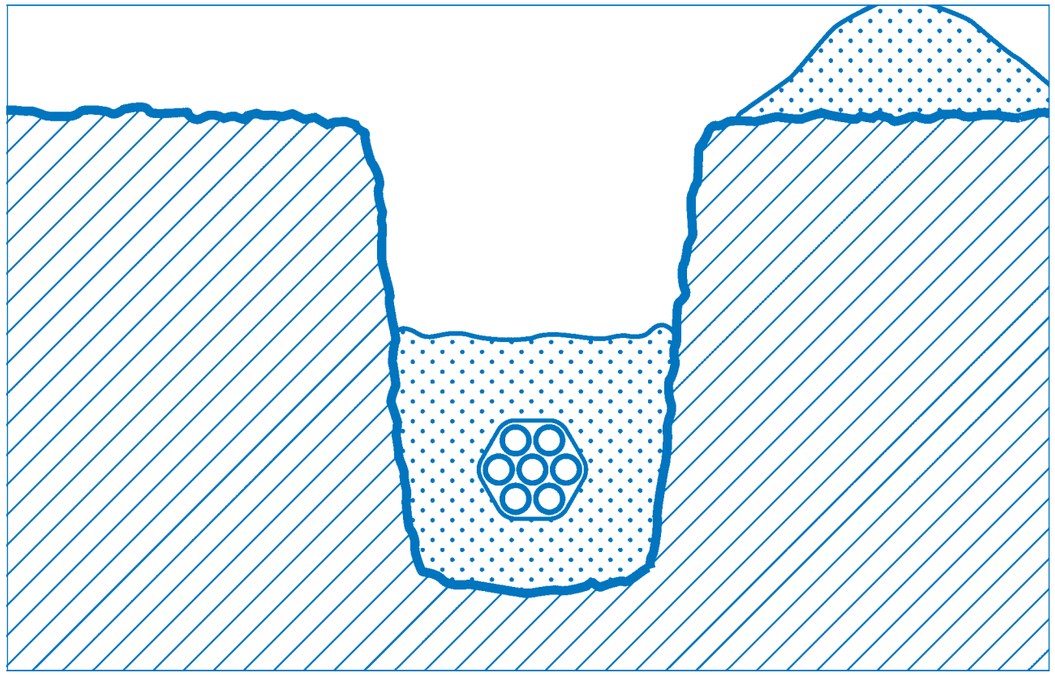

Pipe trench installation

The trench bottom should be level and flat and be free from roots and rocks. If the underground is very uneven, the trench bottom should be compacted with light-weight equipment. If uneven surfaces fail to be removed, there is the risk of them being transferred to the pipe bundles, which would result in impairment of the blow-in performance.

The pipes should be surrounded by a uniform layer of sand (rock-free, which is at least 10 cm thick (rock-free, compactible sand, grain size ≤ 6 mm, no crushed sand). For a rocky and stony substrate (grain size ≥ 63 mm), the minimum thickness of the sand layer should be 15 cm.

The trench is refilled with 30 cm minimum of compactible, rock-free material.

To prevent future damages to the pipe bundles, installing a trench warning tape approx. 30 cm above the pipe crown is imperative. Above this height, mechanical compaction can be applied.

Important: One common cause of blow-in problems consists in damaged Microducts as a result of insufficient sand bedding. Bedding on a sufficient quantity of sand is a must!

Prior to installation, the following prerequisites must be fulfilled:

1. **The minimum width and depth of the trench must be ensured.**
2. **The trench must be sufficiently secured.**
3. **The trench bottom needs to be inspected for freeness from rocks, bearing capacity and evenness.**
4. **The bedding material must fulfil the requirements.**
5. **Intersections with other pipelines are to be marked and secured.**

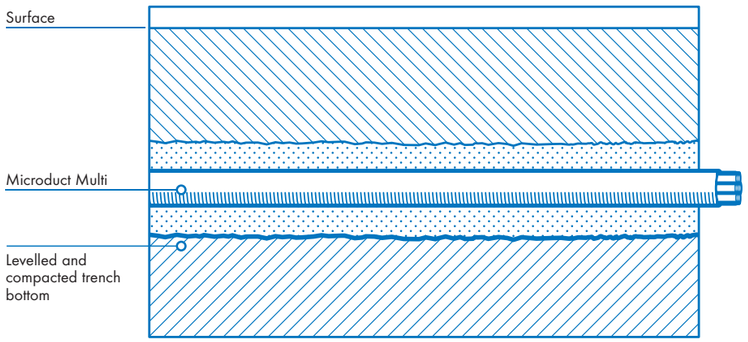

A levelled and compacted trench bottom will prevent occurrance of Multi bundle waviness during subsequent compaction.

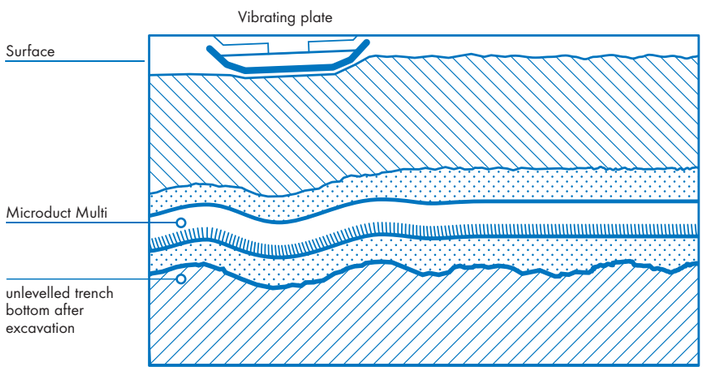

In this, case, the undulating trench bottom failed to be compensated and thus is transfered to the pipe bundle. This is likely to result in a significant reduction of the blow-in length!

No-traffic zones and traffic zones up to SLW 60	
Dimensions (OD/ID) [mm]	Microduct Mono db and Microduct Multi
Installation depth [cm]	50 – 100

Furthermore, the appropriate installation depth may vary according to the conditions on site, and therefore local regulations and the ground structure need to be taken into account.

Pipe trench installation is subject to the specifications of the DIN 4124 standard.

Ø outer diameter of the installed pipe/pipe bundle [cm]	Trench width per installation depth [cm]		
	≤ 70	71 – 90	91 – 100
20	30	40	50
25	35	40	50
30	40	40	50
For every additional 5 cm	Plus 5 cm		

Recommended standard-pipe trench installation following ZTV-TK Network 10 and KRV A 535b. In special cases, such as for field and wood paths, water bodies, roads or on private property, local regulations must be heeded and adaptations made, if required.

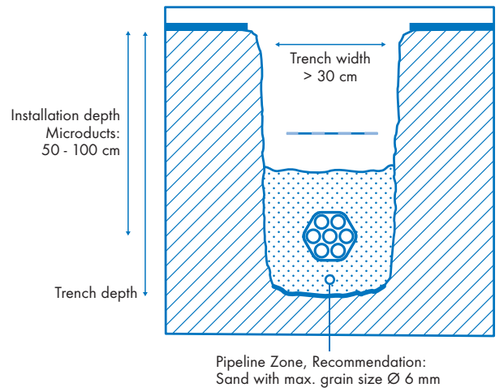

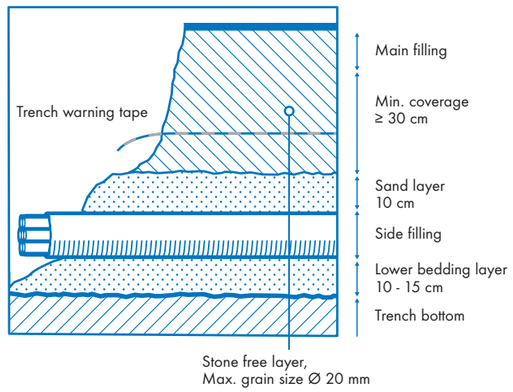

Horizontal Directional Drilling

Flush-drilling initially involves drilling an underground canal with a lance. During the pulling back process, one or multipe Micro pipe bundles are connected at the drilling head and subsequently pulled back. This method is appropriate whenever the ground surface is required to remain untouched or at locations where construction sites may or can only take up little room. This includes places such as protected areas or difficult-to-access terrain with significant differences in height. Compared to other methods, the HDD method significantly reduces interference with nature and the local landscape to ensure that impairment of bio diversity remains as low as possible. With a view to protecting nature in particular, this method offers a particular/big advantage.

Flush drilling is associated with enormously strict requirements regarding the pipe bundles. Ideally, the pipe bundles of choice should be as round as possible and feature a robust and dimensionally stable outer sheathing. The egeplast Microduct Multi protec has been optimised for these increased demands as well as the high traction forces involved.

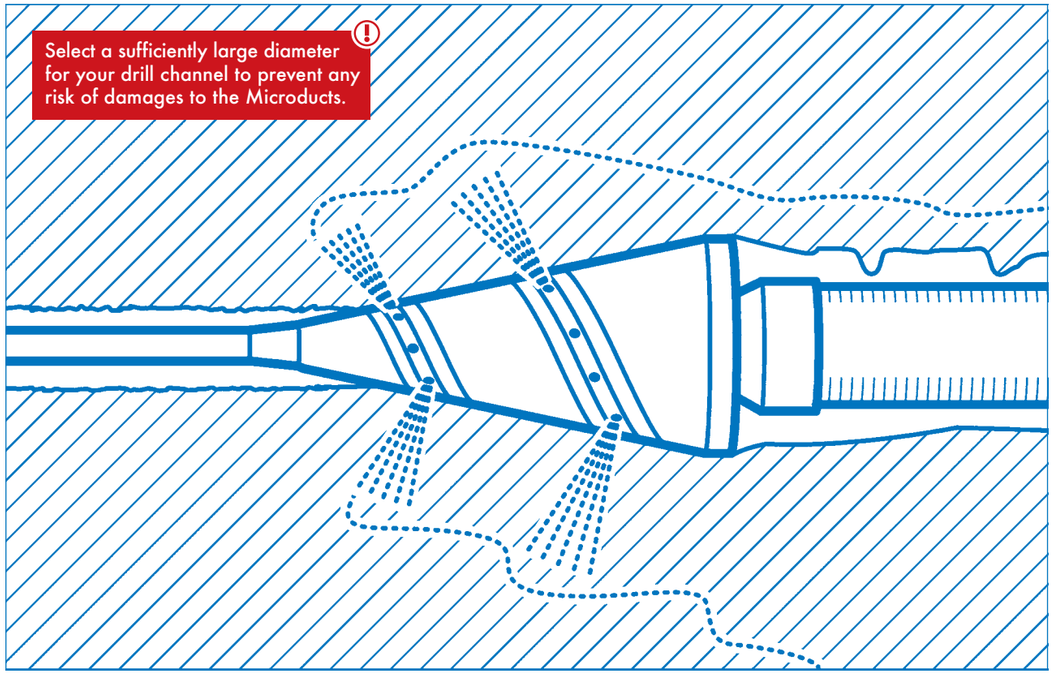

- ✓ can be used in many types of soil
- ✓ lower material input
- ✓ shorter construction time
- ✓ traffic areas subject to less mechanical stress
- ✓ less damage to surfaces
- ✓ lower cost and less work associated with the restoration of the surfaces
- ✓ high practicability related to the connection of FTTB/ FTTH house connection

Ploughing method

The ploughing method involves pulling a pipe-laying mole plow through the soil with the help of a suitable tractor unit, thus generating a furrow in the soil and providing a laying depth which can be determined individually by adjusting the plough attachment accordingly. The pipe is inserted into the resulting hollow space. At the same time, the hollow space is backfilled with the previously displaced soil.

Accordingly, the ploughing method allows for long installation distances. Under the optimum conditions, this method allows for a laying performance of up to 5 km per day. On the other hand, however, the laying performance depends on the soil condition: steep declivity, obstacles on the surface or difficult-to-access terrain result in a significant reduction of the laying performance – or even make it impossible to use this method. Also, the ploughing method can only be used for unsealed surfaces.

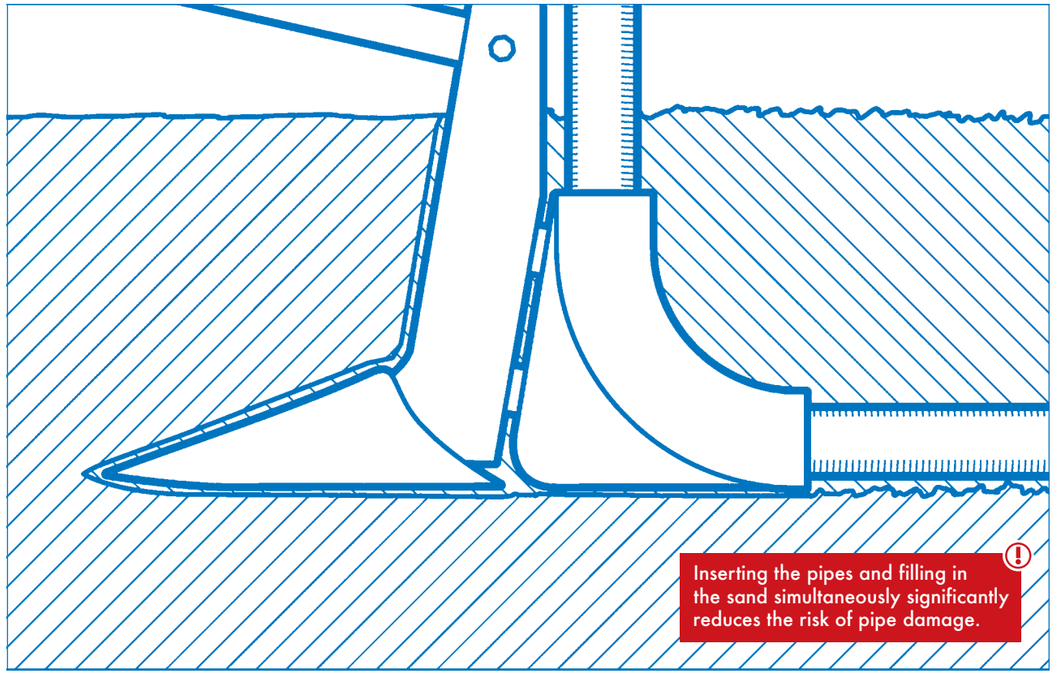

- ✓ applicable in a wide array of terrains
- ✓ high laying performance (up to 5 km per day)
- ✓ cost-efficient installation method
- ✓ immediate restoration of the route
- ✓ little traffic obstruction
- ✓ multiple installation of empty conduits possible

Trenching

Trenching has many advantages for network operators and installers alike. Among other things, it is characterized by low construction costs, rapid installation and little traffic obstruction.

They mainly differ from each other with regard to the width and depth of the completed installation joint as well as the cutting or milling technique applied. The application of trenching requires the presence of an asphalt surface.

Trenching is recommended on sidewalks or bicycle paths because of road damages.

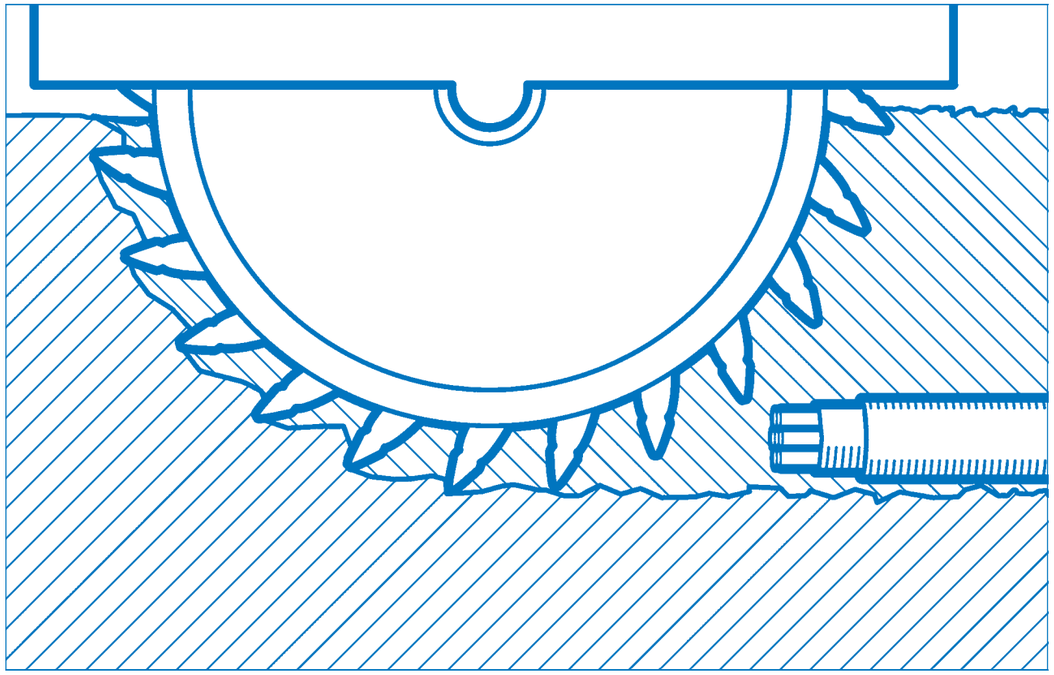

- ✓ low place requirement
- ✓ less traffic obstruction
- ✓ high performance over long distances for good asphalt surface (up tp 600 m/day)
- ✓ small quantity of demolition material
- ✓ minimum surface damages
- ✓ hardly any hazard to existing pipelines thanks to low milling depth

Moling (impact mole)

Moling using an impact mole is an installation method usually used in connection with house connections. Fibre optic house connections are established using a fast, safe und economic trenchless installation method and can be laid up to the building or guided out of it.

A pneumatically operated hammer creates a hollow space into which the new pipeline can be bedded. To do so, the soil must be sufficiently displaceable.

In loose and soft soils, the impact mole requires some static support since otherwise it will not be possible to build up sufficient friction with the soil to enable independent advance. Accordingly, the propulsion channel must be designed more precisely in stony soils owing to lateral displacement of the rocks. Under these soil conditions, the impact mole will only escape sidewards to a lesser extent. Bearing of the target is taken in the starting pit and is vitally important since the impact mole cannot be controlled.

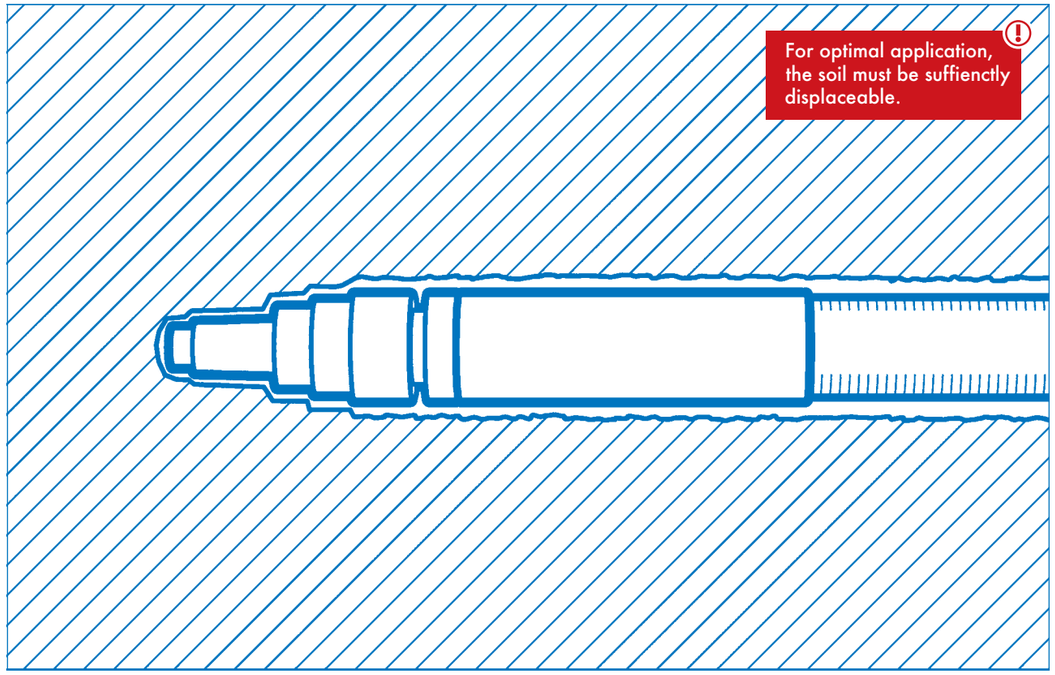

- ✓ installation of the empty conduit in a single pass
- ✓ little traffic obstruction
- ✓ small constructions sites and small equipment
- ✓ crossing of obstacles
- ✓ minimal surface damages
- ✓ flexible installation depths
- ✓ relatively short installation distances

Blow-in into an empty conduit

The di version of the egeplast Microduct Mono pipes is particularly suitable for subsequent assignment in larger egeplast Macroducts. Prior to the blow-in operation, we recommend to calibrate and clean the empty conduit and to lubricate it. Prior to initiating the measure, a crash test should be carried out in order to determine the maximum feed force. Mono pipes are to be filled at a pressure between approx. 8 and 10 bar, which will make then stiffer and reduce sidestroke, thus enabling increased blow-in lengths. Make sure that the Mono pipes run as straight as possible and that the drums can rotate freely. All Mono pipes are to be blown in in a single pass, since subsequent blowing in is not possible.

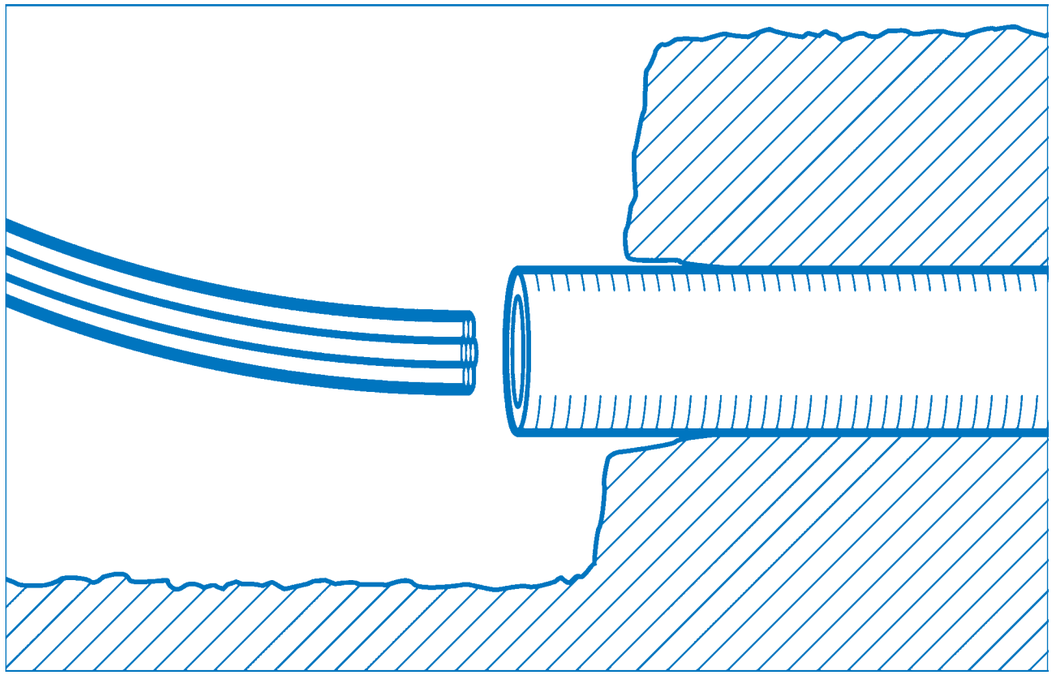

To check out the common occupancy rates of empty pipes, please refer to the table below:

	40x3.7 mm	50x4.6 mm	63x5.8 mm
10x1.0 mm	Max. 5x 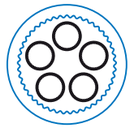	Max. 7x 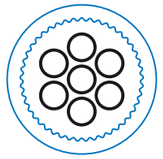	Max. 7x 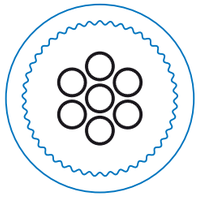
12x1.1 mm	Max. 3x	Max. 5x 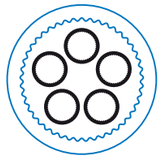	Max. 7x 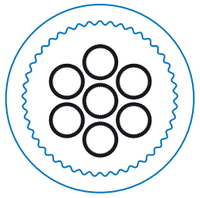
14x1.3 mm	nicht empfohlen	Max. 4x 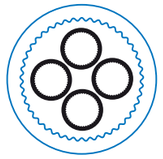	Max. 4x 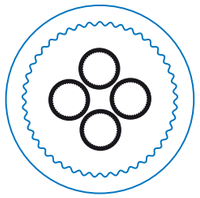

Important tips for the blow-in process (cable)

Successful blow-in of fibre optic cables depends on many factors. All egeplast Microducts feature dimensionally optimised grooves to minimise friction for the cable. Every pipe dimension has a cable diameter which is optimal for the blow-in process.

Dimension	ID	Cable-Ø	Optimal cable-Ø
7 x 1.5 mm	4.0 mm	1.0 – 2.9 mm	2.3 mm
10 x 2.0 mm	6.0 mm	2.0 – 4.5 mm	4.0 mm
10 x 1.0 mm	8.0 mm	4.0 – 6.5 mm	6.2 mm
12 x 2.0 mm	8.0 mm	4.0 – 6.5 mm	6.2 mm
12 x 1.1 mm	9.8 mm	5.0 – 8.3 mm	8.0 mm
14 x 2.0 mm	10.0 mm	5.0 – 8.5 mm	8.0 mm
14 x 1.3 mm	11.4 mm	6.4 – 9.8 mm	9.0 mm
16 x 2.0 mm	12.0 mm	7.0 – 10.0 mm	9.8 mm
20 x 2.5 mm	15.0 mm	8.0 – 12.0 mm	10.5 mm

Factors influencing the blow-in process

In addition to the cable diameter there are other factors which may impact the successful completion of the process:

Blow-in team

- execution by skilled expert staff
- inspection of the pipeline route

Planning of pipe routes

- scareful consideration of differences in height
- reduction of bend diversity

Cable

- optimised, smooth surface
- low tolerance variations
- cable diameter adapted pipe dimension
- neat appearance of winding – no sidestroke

Microducts

- low-friction inner layer with optimized sliding corrugation
- low tolerance variations
- reduced ovalities
- always protect the inside of the pipe from contamination and water

Blow-in equipment

- use of a reasonable quantity of lubricant
- use of a cable guiding head is urgently recommended
- use of an intelligent blow-in unit with automated logging
- compressor with an adequate volume flow rate and optional blow-in pressure of up to 15 bar
- use of an external air cooler
- use of a "lubricator" for optimum cable lubrication

Installation

- adherence to the largest bending radii possible
- straight installation
- no twisting of the pipe bundles
- trench bottom must be flat

Weather

- Optimum blow-in temperature between **5 °C** and **20 °C**

Insertion into empty conduits

The precondition for pulling in pipe bundles is that the empty conduit is clean and dry. Its inner diameter should exceed the outer diameter of the pipe bundle to be inserted by 25 % minimum. The drum or coil should be positioned in a way which ensures smooth insertion of the pipe. The pipe bundles are pulled in by means of a pulling head or pulling grip which suit this purpose. We urgently recommend using a lubricant. The maximum tensile forces must not be exceeded in this process (p. 49).

Important!: The ends of the inner pipes should always be closed off during pulling in.

Since the pipe might reset owing to tensile stress and temperature differences, an extra length of 1 m minimum should be maintained at both ends of the empty conduit. Before connecting the pipes, the egeplast Microduct Multi bundle should rest for 12 to 24 hours.

Against this background, the factors impacting the reset time for the expansion following pulling are as follows:

the tensile forces which occurred

the inserted length

the local temperature conditions

Final inspection

After completion of the installation work, it is recommended to check the pipes for leaks and to document this.

Recommendation based on ZTV-TKNetz 40:

- Filling phase during which all pipes are filled with air pressure – Checking via pressure gauges at the beginning and end of the pipe
- Simultaneous preliminary testing of several pipes (5 min testing time at 5 bar, maximum pressure drop 0.5 bar)
- Settling phase: 20% of the main test time
- The duration of the main test is given by the following formula:

$$t = t_{min1} + n * t_{min2} * L_F$$

t = Duration of main test
t_{min} = Minimum test time
t_{min1} = 5 min.
t_{min2} = 3 min.
n = Number of tubes
L_F = Pipe length [m] / 1,250 (length factor)

tested with 5 +/- 0.3 bar
maximum pressure drop 0.5 bar

Calibration

We recommend to check the installation of the Microduct Mono and/or Microduct Multi pipes by means of calibres, primarily using calibration sets together with a micro transmitter for subsequent localisation.

Setting up a house connection: Stripping of Microduct Multi pipes

To connect two Microduct Multi pipes or to integrate a branch for a house connection, you will need to remove the sheathing of the Microduct Multi pipe. Utilisation of improper tools mmay result in damage to the inner pipes, which can cause the pipe to burst during blow-in. Accordingly, only blades with a slide shoe should be used. For a step-by-step description of the stripping of a pipe end, please check out the illustrations below:

1. Notch the sheathing with the circular pliers at two spots at a distance of 60-100 cm from each other.

2. Use the sheathing knife to prick the sheathing at the notch and push it as far as to the 2nd notch.

3. Open the sheathing.

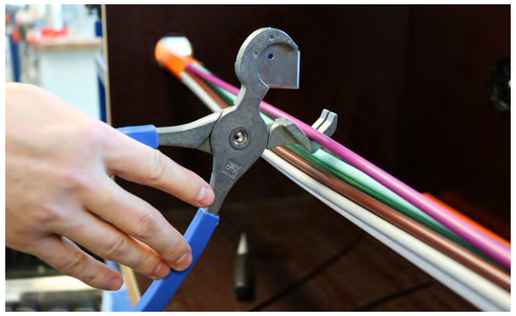

4. Perform a perpendicular cut on the pipe to be cut using the pipe cutter.

5. Cut off another 3 to 4 cm to create enough space for the connector and end stop.

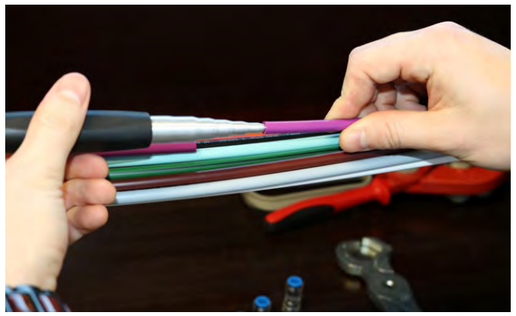

6. Reround the interfaces using the 5/20 tool.

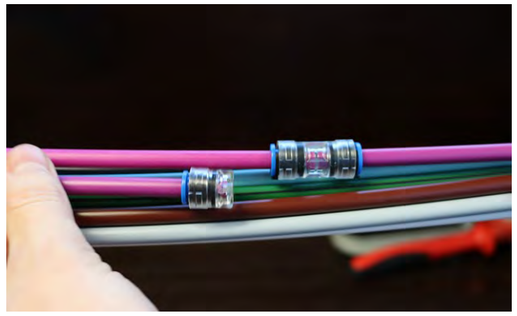

7. Slide the connector and end stopper on up to the stop. Connect the house connection pipe.

8. Fasten the connection and end stopper with cable tie or the like.

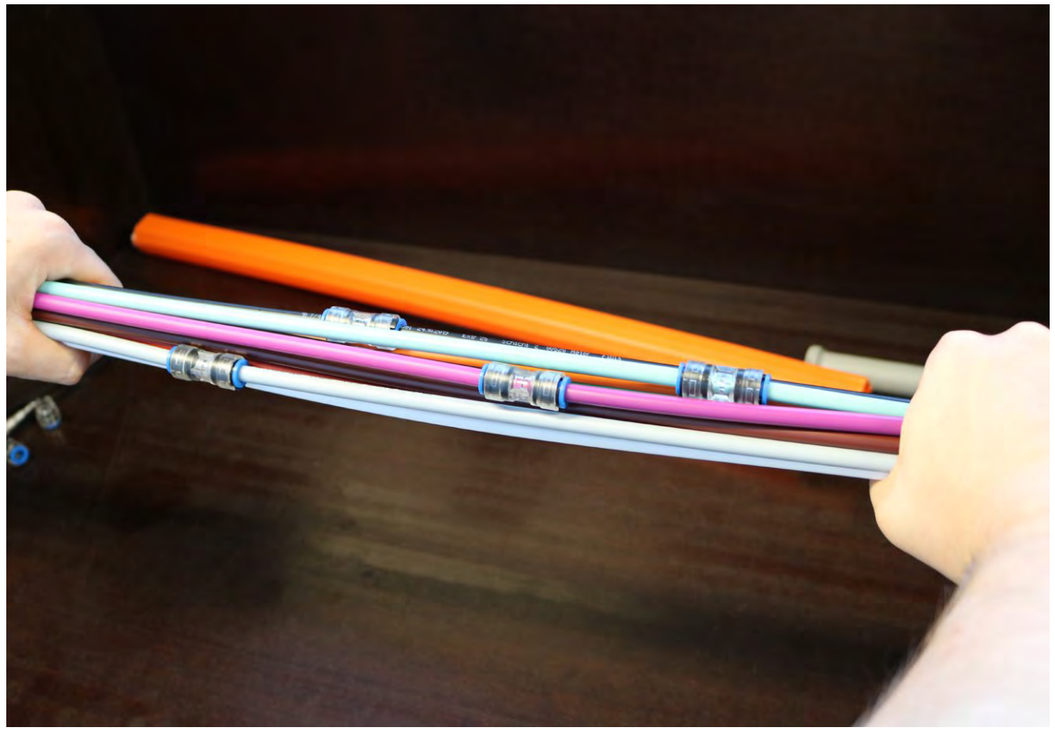

To connect two Microduct Multi pipe bundles, both ends should overlap by approx. 50 cm and the pipe sheathing should be stripped. In doing so, it is important to ensure that the connectors are positioned with some offset to prevent generation of bending radii.

Information and instructions

The information in this document reflects the state of the art at the time of its compilation. It serves to provide instructions and advice, but no liability can be derived from it. It does not purport to be exhaustive and is subject to modifications.

For any inquiries related to the installation, use, maintenance or repair of our products or other questions, please feel free to approach our customer service. In addition, our staff will be happy to provide you with a technical briefing.

Publisher:
egeplast international GmbH

Issue:
May 2022

Telephone: +49 2575 9710-0
Fax: +49 2575 9710-110
E-Mail: info@egeplast.de

Please be advised that the warranty shall be inapplicable if and to the extent that the instructions on proper installation and processing as well as use of our products contained in this document are not strictly observed. The relevant safety regulations as well as currently applicable standards, guidelines and sets of rules as well as other relevant provisions must be respected.

Sales and delivery of our products are governed exclusively by our applicable Terms and Conditions at any given time which you can access on our website under www.egeplast.de.

Any reprint or reproduction of these documents, even in part, shall be authorized in writing by egeplast international GmbH.

Information, sources and background details regarding our sustainability management can be found on our website at www.egeplast.de/en/sustainability

www.egeplast.eu

egeplast

egeplast international GmbH

Tel.: +49 2575 9710-0 | Fax: +49 2575 9710-110
Robert-Bosch-Straße 7 | 48268 Greven, Germany
info@egeplast.de | www.egeplast.eu

ege 2536 UK 05/22